NIDays

CompactRIO Real-Time Control for Hydraulic Turbomachinery Model Testing

Vlad Hasmatuchi, HES-SO VS
Francisco Botero, EAFIT
Shadya Gabathuler, HES-SO VS
Cécile Münch, HES-SO VS

Overview

- New HES-SO Valais//Wallis universal hydraulic test rig [1]
  - Designed, executed and assembled at the HES-SO VS

Cloud of variables

Prototype control/monitoring system

Test rig control system

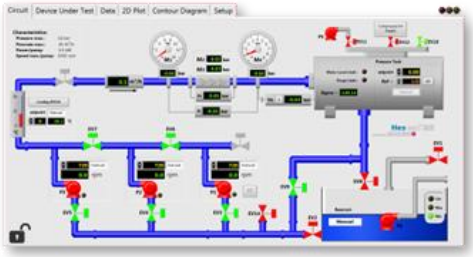

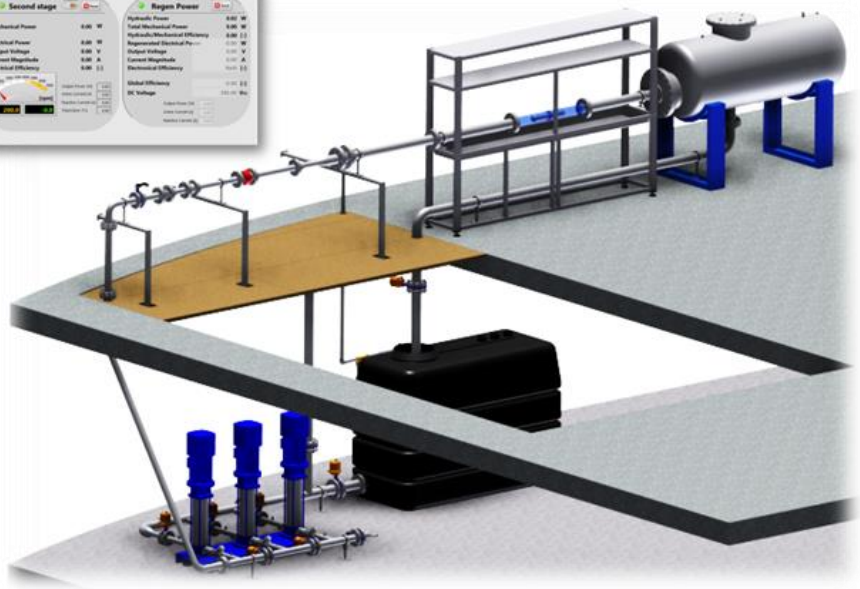

Main characteristics:

Maximum head: **160 mWC**
Maximum discharge: **45 m³/h**
Generating power: **10 kW**
Pumping power: **3 x 5.5 kW**
Maximum pumps speed: **3'000 rpm**
Total circuit volume: **4.5 m³**

Strategy of regular performance tests

Monitoring of safety indicators

Reaction to events

Verification checklist

Instruments, sensors, actuators

Drive the test

Data-logging, processing and managing
Preliminary results → 2D and 3D plots

Regulation of hydraulic energy

Recirculating pumps: configurations and speed

Regulation of implantation level

Pressure tank

Control of the testing model

Rotating speed for every stage

Technical challenges

- Security of the user and of the infrastructure
- Robust automatic control
- Integration of several sensors of different types
- Multiple synchronized acquisition/control systems
- High-precision measurements in respect to the IEC 60193 standard recommendations [2]

Hydraulic circuit

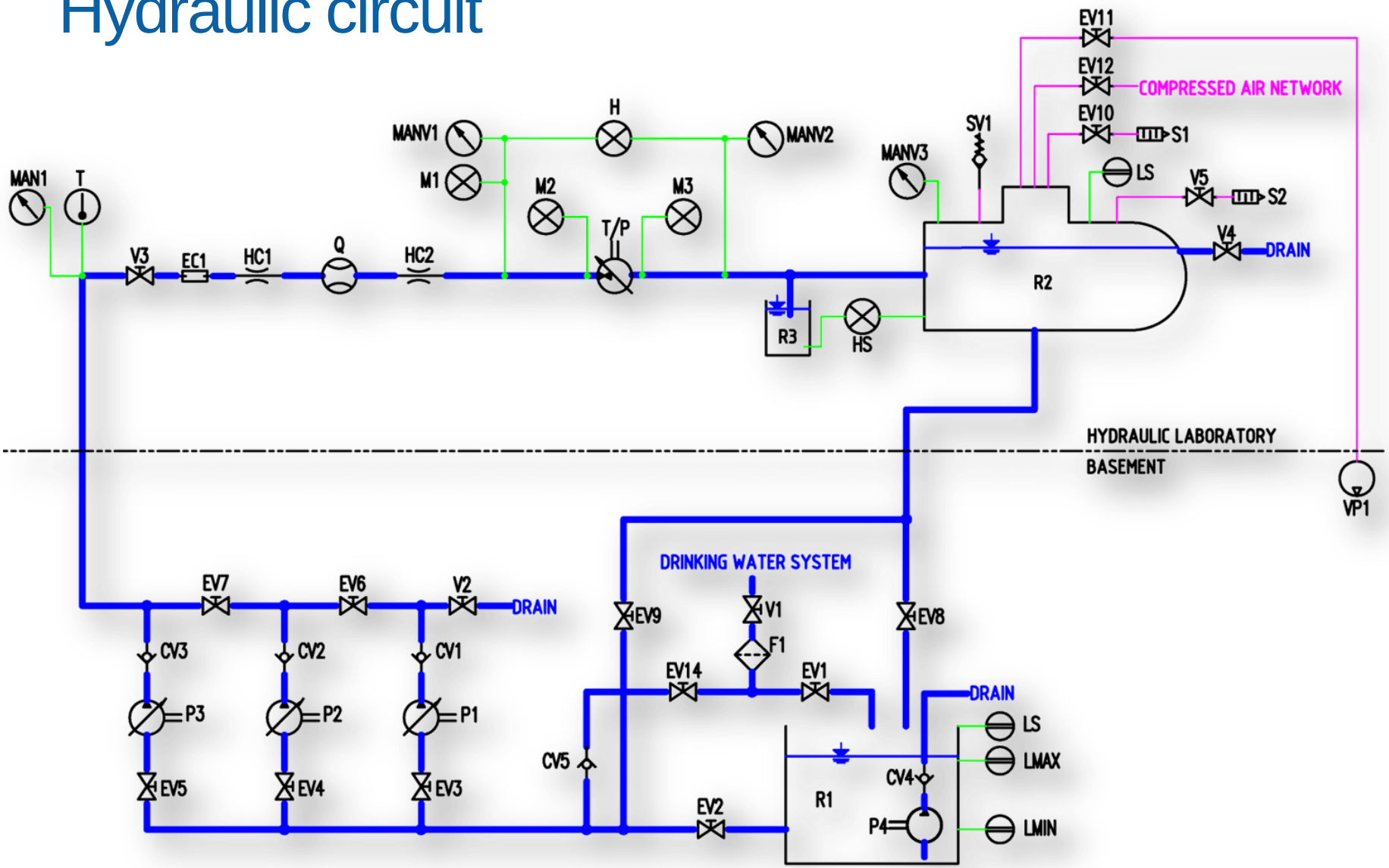

Hydraulic circuit

Acronym	Component	Functionality
R_1	Main reservoir	Supplies the test rig with water
F_1	Filter	Water filter
EV_1	Solenoid valve	Controls the water supply from the drinking water system
P_4	Centrifugal pump	Drains the main reservoir
CV_4	Check valve	Ensures unidirectional flow toward drain
$P_{1, 2, 3}$	Centrifugal pumps	Supply the circuit with hydraulic power
$CV_{1, 2, 3}$	Check valves	Ensure unidirectional flow in turbine mode operation
T/P	Turbine/Pump	Variable speed reduced-scale testing model
$EV_{2, 3 \cdots 9}$	Solenoid valves	Control the hydraulic circuit configuration
EV_{14}	Solenoid valve	Controls the fresh water supply for cooling
CV_5	Check valve	Ensures unidirectional flow during cooling
EC_1	Expansion compensator	Ensures axial direction flexibility for the testing model assembly
$HC_{1, 2}$	Honeycomb sections	Ensure uniform flow upstream the flowmeter and the testing model
R_2	Pressurised reservoir	Allows simulating different positive or negative implantation levels
$EV_{10, 11, 12}$	Solenoid valves	Control the air pressure into the pressurised reservoir
VP_1	Vacuum pump	Supplies the pressurised reservoir with vacuum
SV_1	Safety valve	Protects the pressurised reservoir from excessive pressure
$S_{1, 2}$	Silencers	Silencers for pressurised air drain
R_3	Level reservoir	Water reservoir for the zero implantation level of the testing model
$V_{1, 2, \ldots}$	Manual valves	Security and control for filling, spillway and operation of the test rig

Electrical circuit

- VALVES CONTROL
- PUMPS (P1/P2/P3) POWER ON
- DRAIN PUMP (P4) CONTROL
- VACCUM PUMP CONTROL
- SAFETY ELECTRICAL DEVICES
- RELAYS
- 24VDC SUPPLY
- NI COMPACT RIO
- TERMINALS
- 3x400VAC
- 1x230VAC
- 24VDC

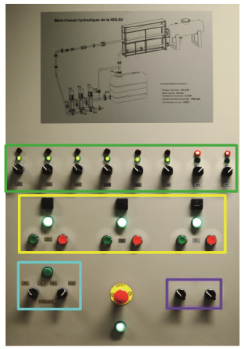

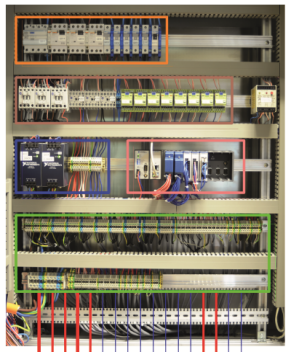

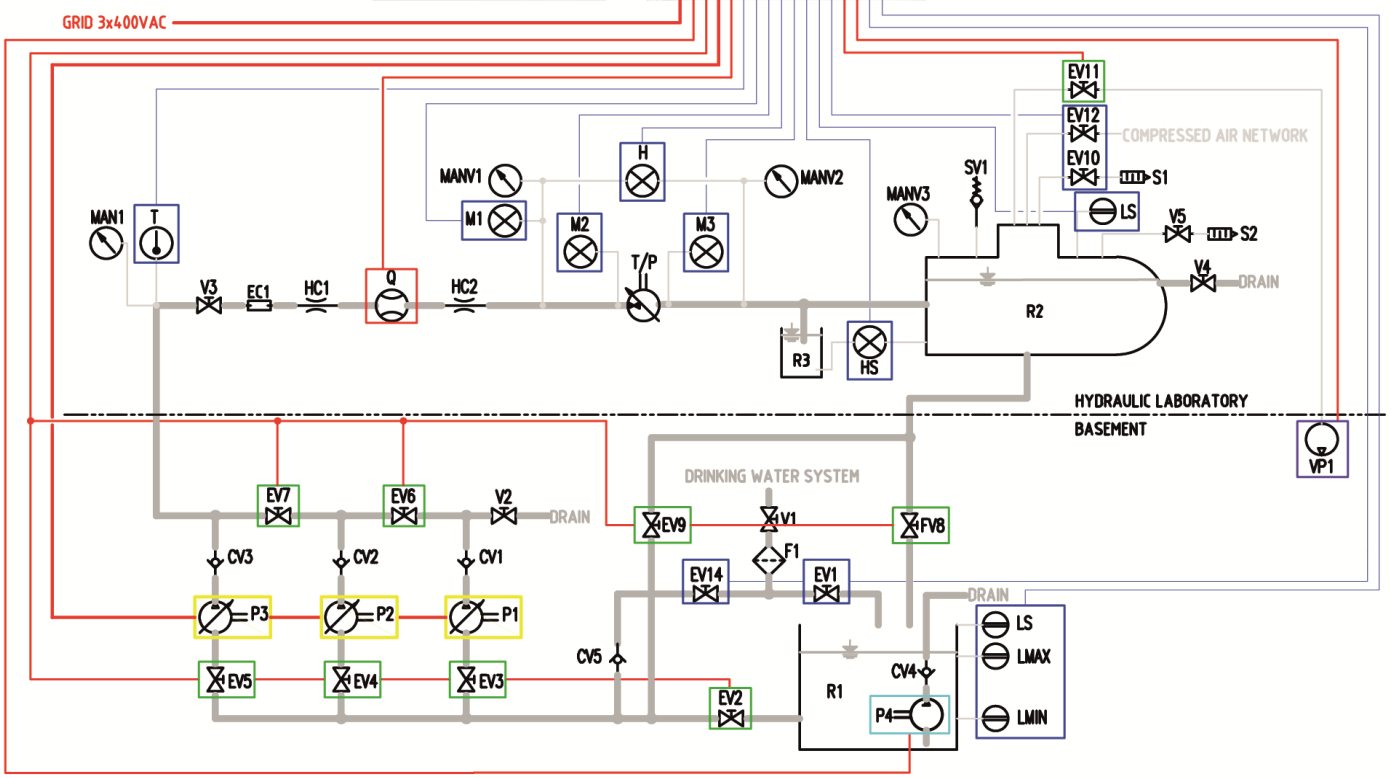

Instrumentation

Electromagnetic flowmeter

Temperature transducer

Differential pressure transducers

Absolute pressure transducers

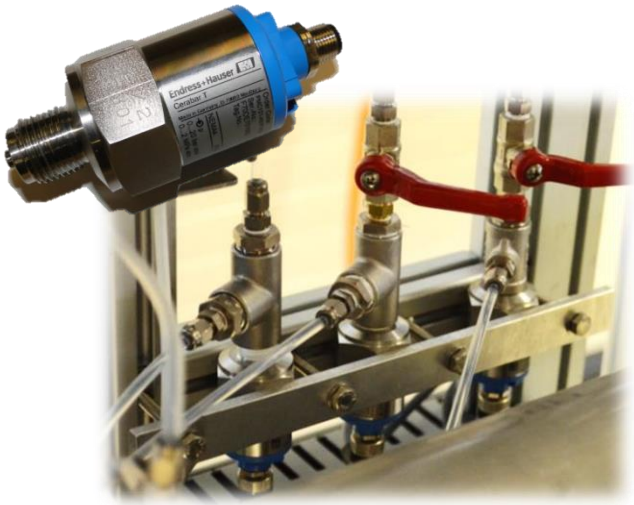

Optical tachymeters

Instrumentation

Acronym	Measured/displayed quantity	Output signal	Range	Precision
Q	Discharge	4..20 [mA]	0..50 [m^3/h]	± 0.5 [%]
H	Head	4..20 [mA]	0..16 [bar]	± 0.1 [%]
H_s	Implantation level	4..20 [mA]	0..5 [bar]	± 0.2 [%]
$M_{1, 2, 3}$	Absolute static pressure	4..20 [mA]	0..10/20 [bar]	± 0.05 [%]
T	Temperature	4..20 [mA]	0..100 [°C]	± 0.1 [%]
$n_{pump1, 2, 3}$	Rotational speed	24 [V] pulse	0..1000 [Hz]	-
$L_{min, max, s}$	Min, max & security levels	24 [V]	on/off	-
Man_1	Relative static pressure	-	0..16 [bar]	± 1 [%]
$MV_{1, 2, 3}$	Absolute static pressure	-	-1..9/15 [bar]	± 1 [%]

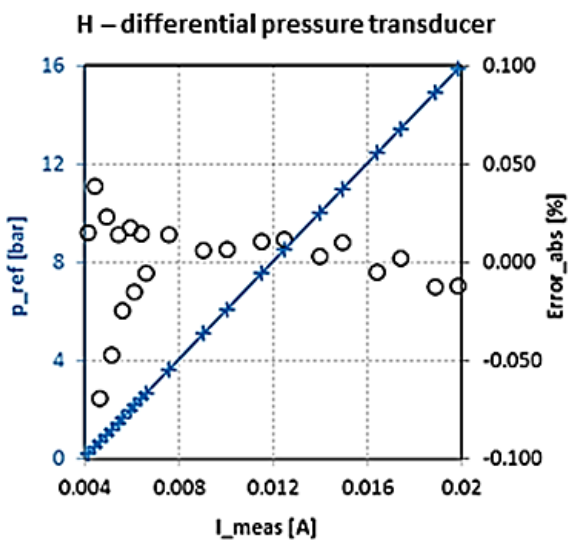

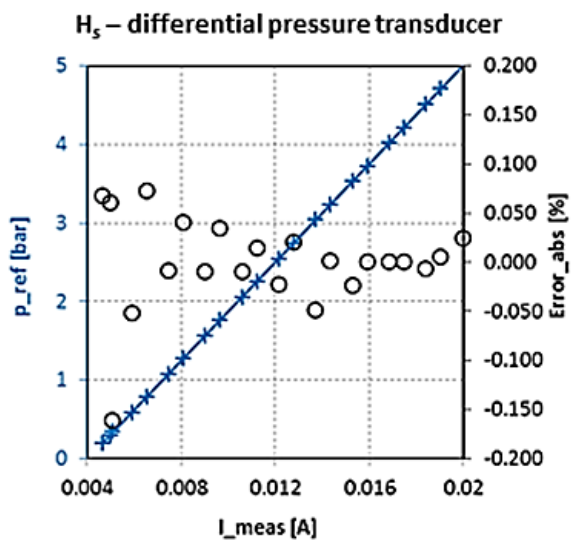

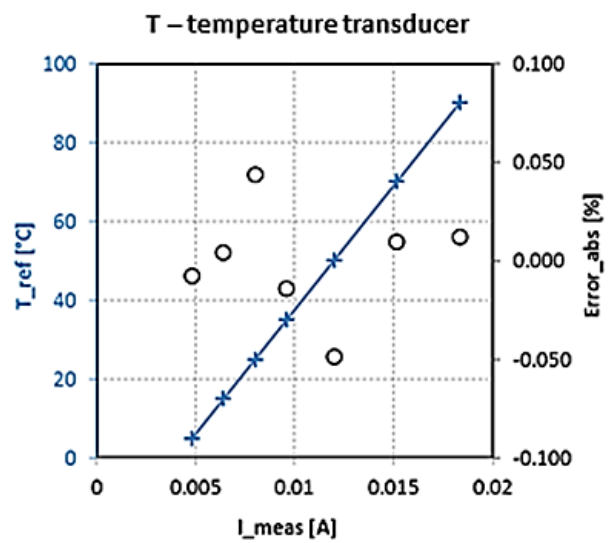

Security and control

Vacuum pump

Solenoid valves

Water level detectors

Multi-user control system architecture

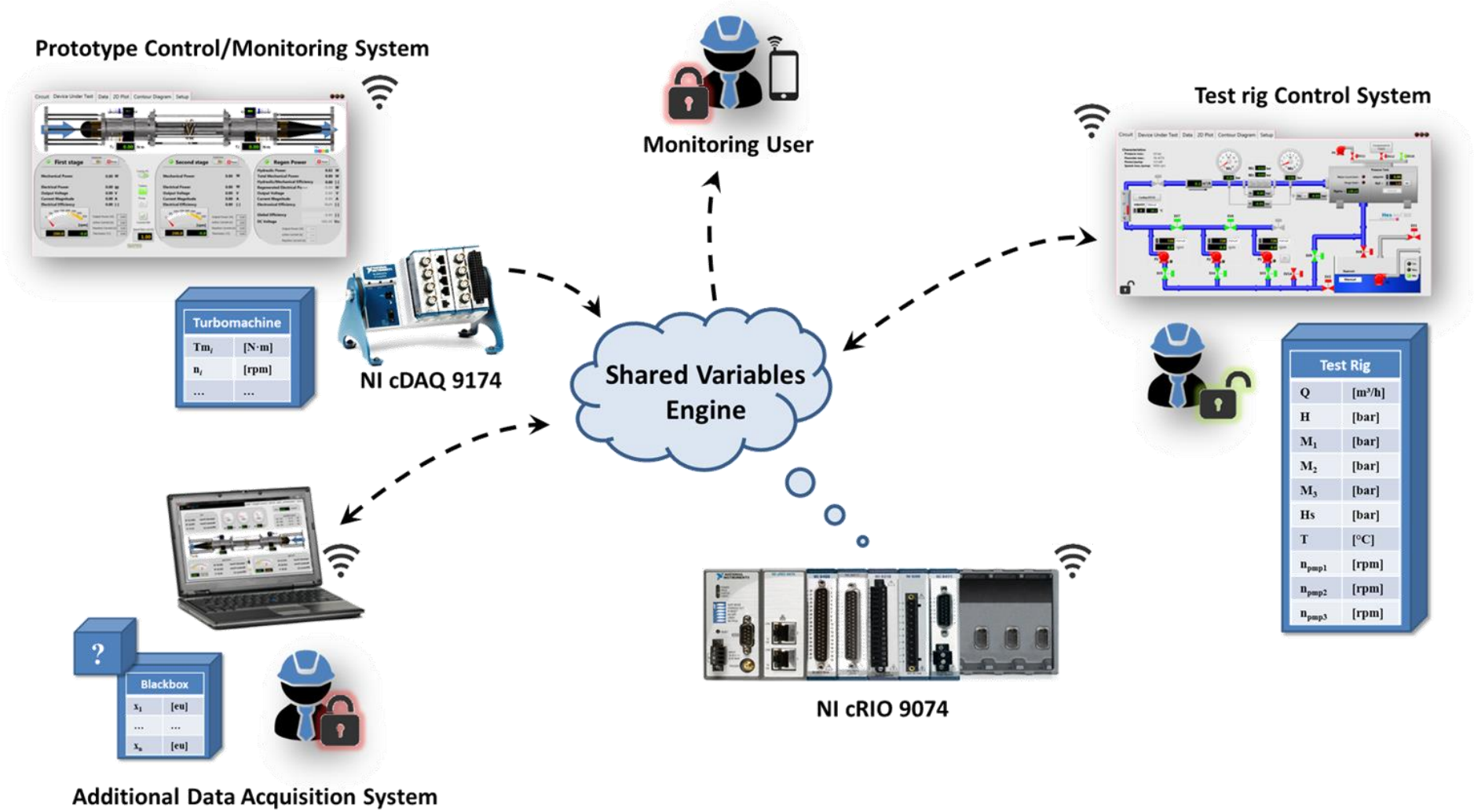

Controller

NI CompactRIO 9074

NI Modules	
NI 9425	32 DI
NI 9477	32 DO
NI 9203	8 AI (current)
NI 9265	4 AO (current)
NI 9411	6 DI (CTR)

FPGA

Scan Engine

CPU

Drivers, Controllers and communication.

- Shared Variable Engine (SVE)
- Timed Loop (Scan Interface Synchronized)
- Low priority loop: Finite State Machines, communication and Network-Published-Shared-Variables hosting (database)

Controller

- Managed test rig I/O variables

Real-Time software structure

- Control and monitoring software: created with Labview®
- Real-time application: main sequences

1. Initialize

- Initialize variables and arrays
- Load default hardware setup values from the configuration file

2. Main Processing

High Priority Loop

- Scan engine synchronized
- Sample/updates channels at the scan engine rate
- Single process shared variables with single-element RT FIFO enabled

Low Priority Loop

- Communication (NPSV)
- PIDs
- Finite State Machines

3. Shutdown

- Output channels to default values
- Set variables to default values

Shared Variable Engine

- The networking implementation is handled entirely by the *network-published variables*:
  - cRIO-R : Monitoring (Read)
  - cRIO-W : Control (Write)

- Based on the NI Publish and Subscribe Protocol (NI-PSP)
  - a networking protocol optimized to be the transport for Network Shared Variables

- Running in the cRIO 9074

Shared Variable Engine and value changes

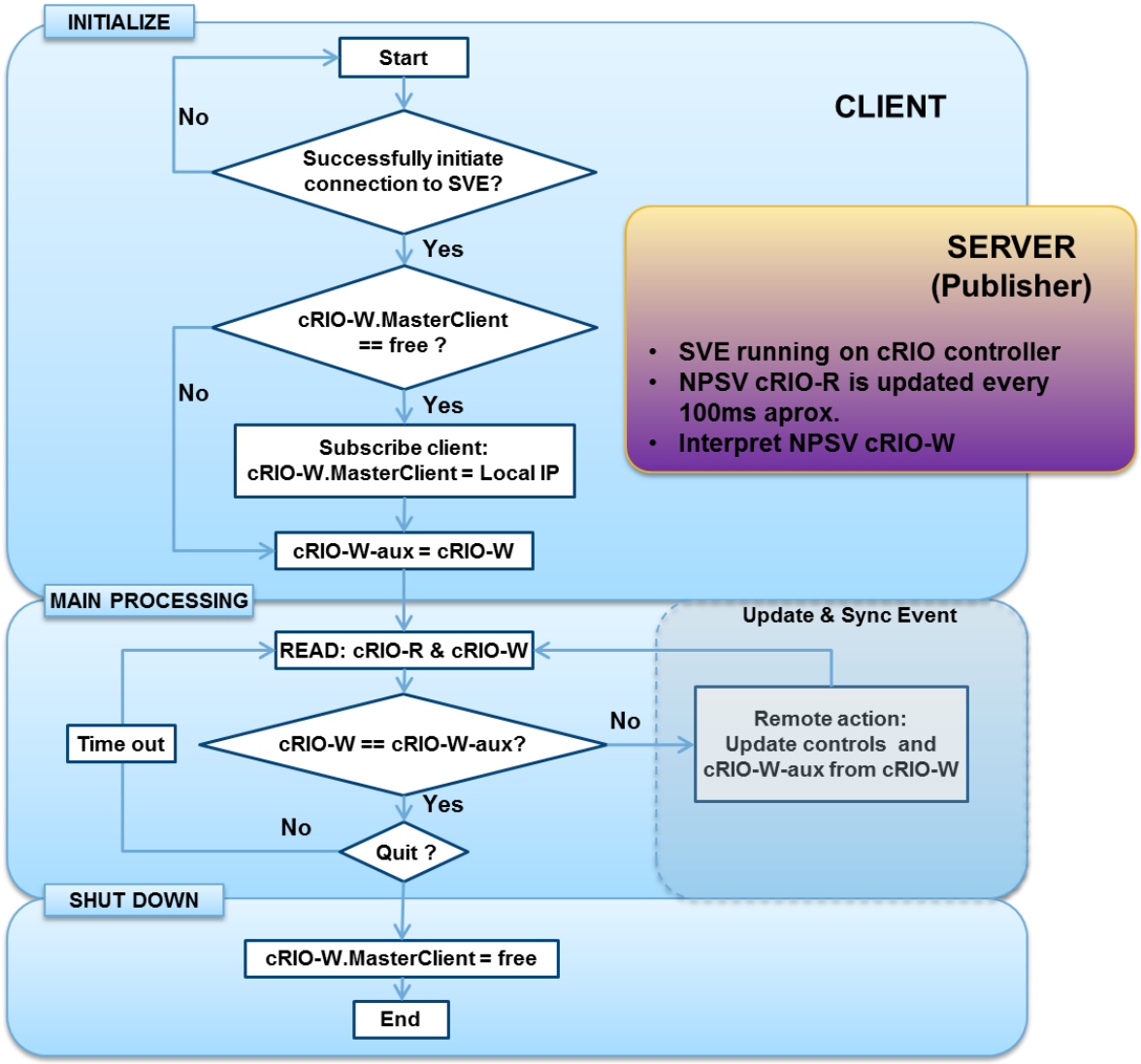

Shared Variable Engine and value changes

4. SVE records the value change and publishes the new value to all subscribers

NI-PSP

6. Value change is received and read

5. Value change is sent to all subscribers using NI-PSP

SVE

Variable 1

⋮

Variable *n*

client

Variable1

NI-PSP

3. Value change is sent to SVE where *Variable 1* is hosted using NI-PSP protocol.

The *SVE client* is part of the internal implementation of the variable reference

client

Variable1

1. *Variable 1* is deployed to the CPU where SVE service hosts it

2. Client writes a Value to *Variable 1*

Shared Variable Engine RT implementation

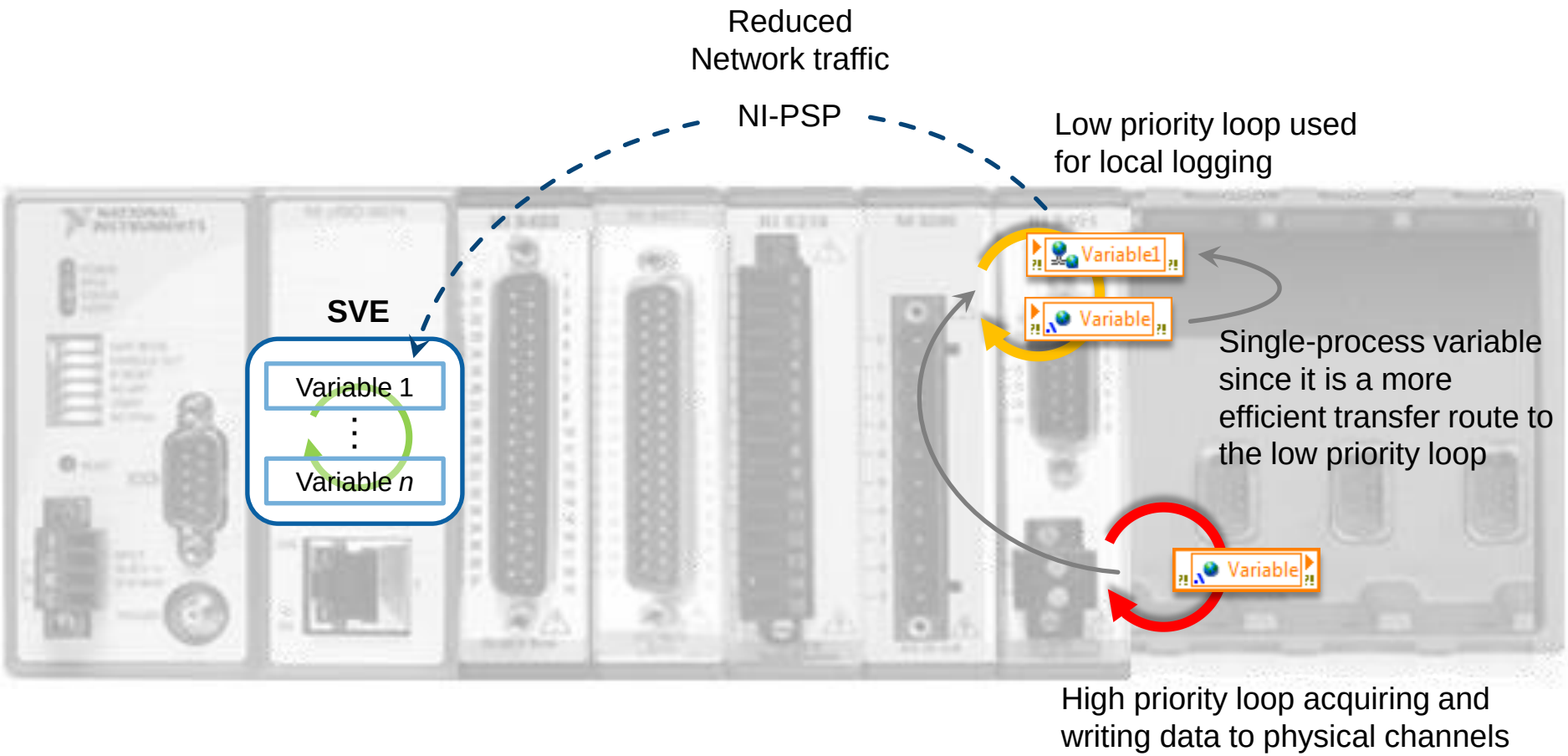

Finite-state machine

- Ensures secured regulation for:
  - Automatic filling of the main reservoir
  - Pressure level in the pressurized tank
  - Water temperature in the closed-loop hydraulic circuit

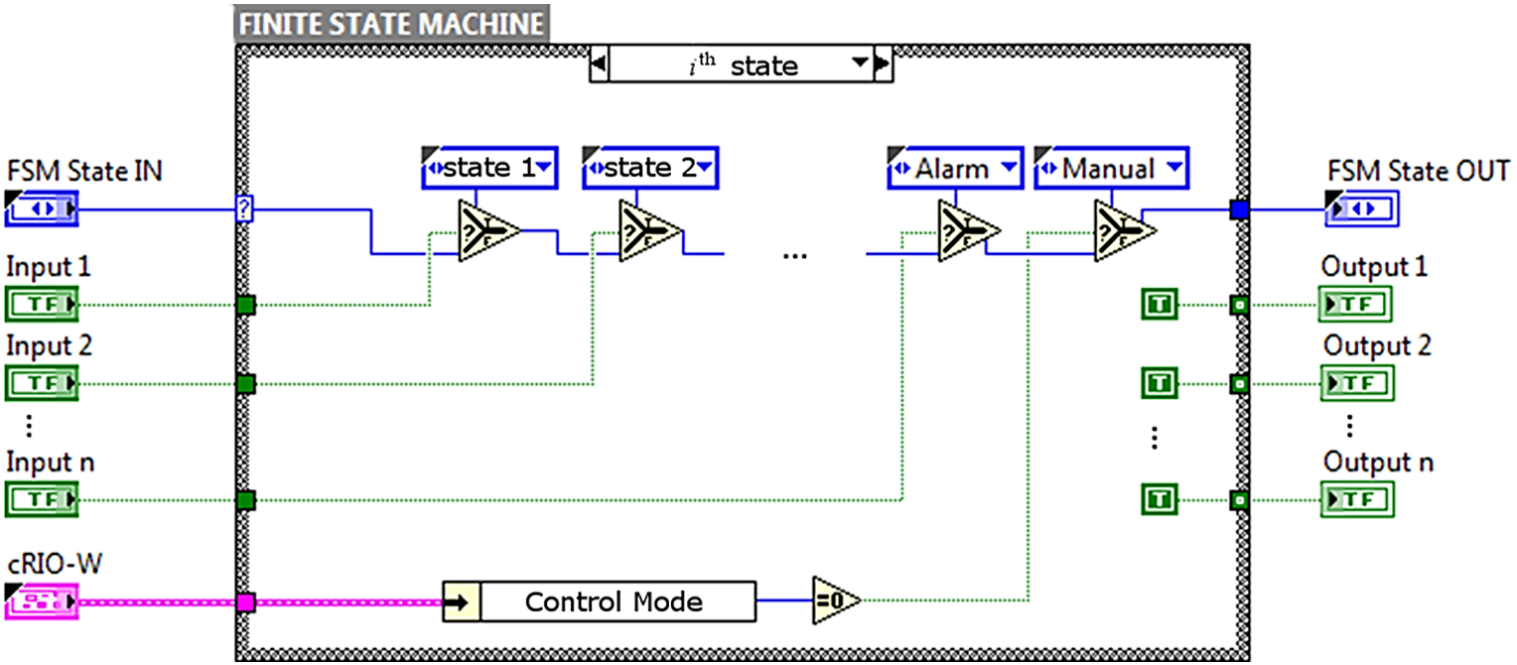

Finite-state machine

- Conditions and states

Water cooling

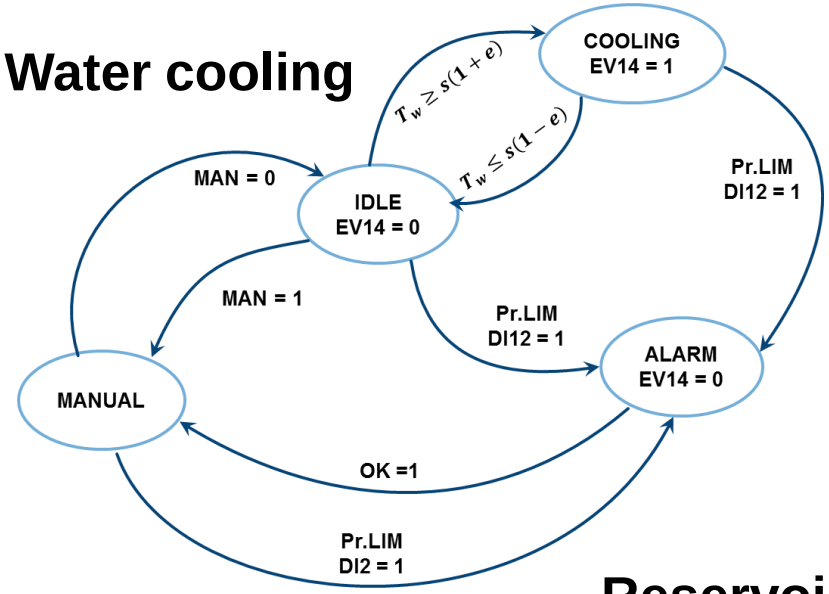

Pressure level

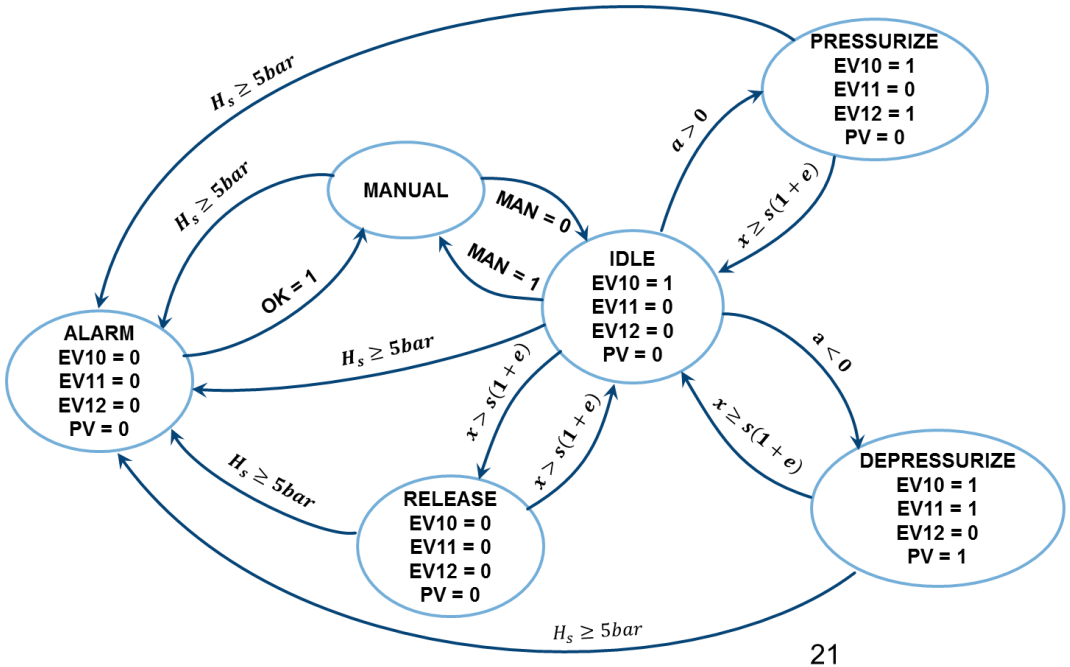

Reservoir filling

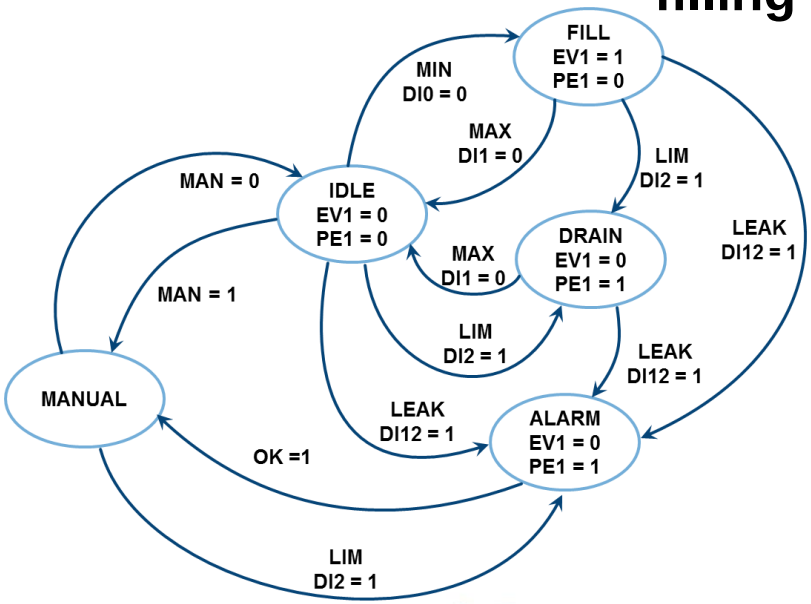

PID driver

- Parallel multi-loop / parameter control: pumps speed, discharge and head
- Manual mode
- Bump-less manual-to-automatic transitions
- Non-linear integral action
- Two degree-of-freedom control
- Error-squared control

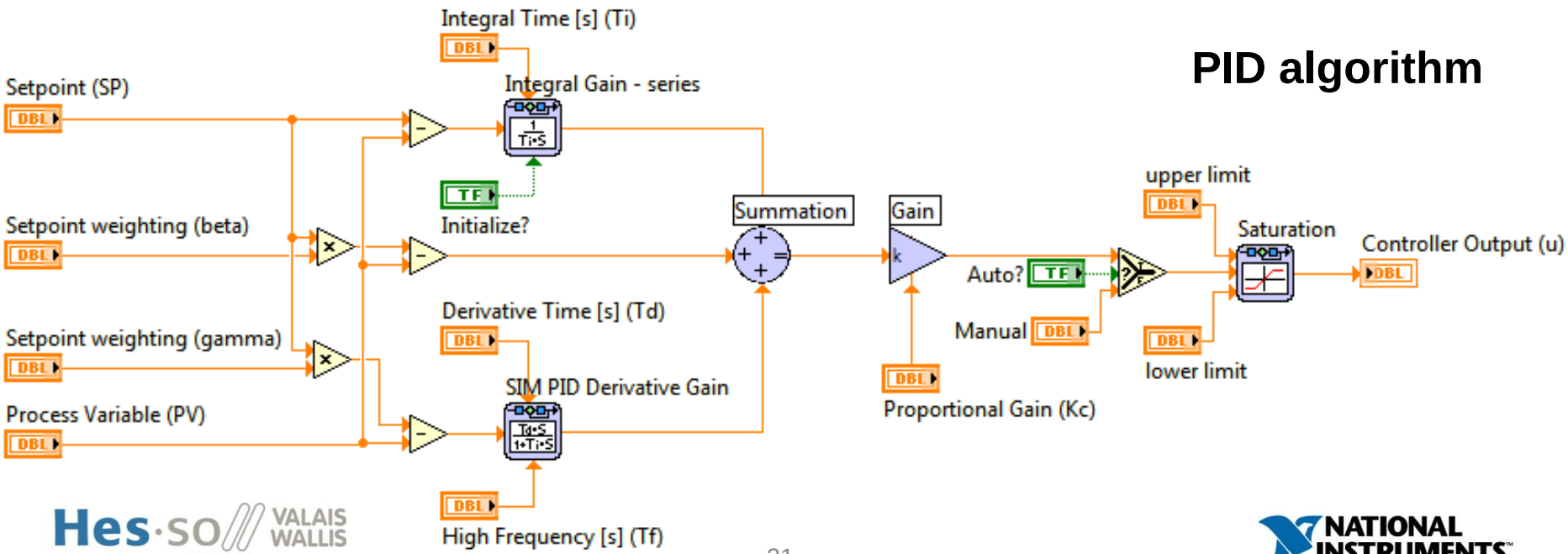

PID tuning: Ziegler-Nichols Method

- It tests the open-loop reaction of the process to a change in the control variable output

- Open-loop step test:

$$K_0 = \frac{X_0}{M_u}\frac{\tau}{\tau_d}$$

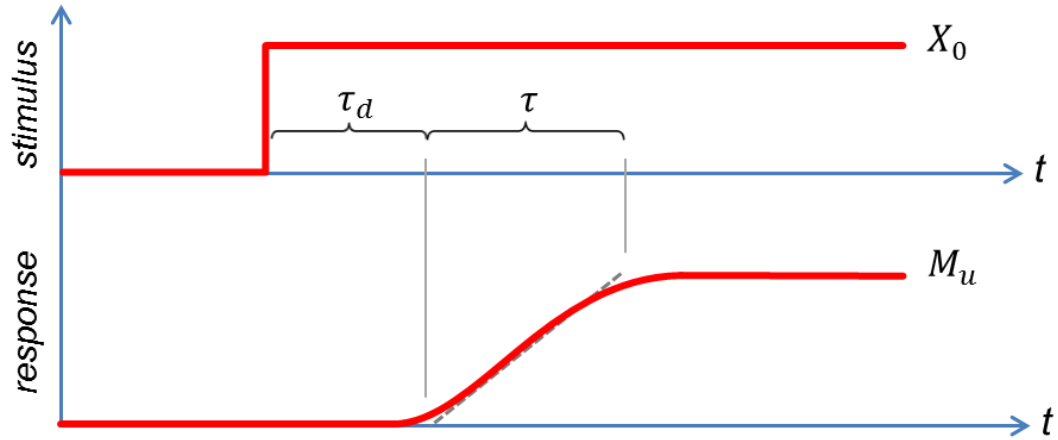

- Determine the dead time, τ_d, the time constant, τ, and the ultimate value that the response reaches at steady-state, M_u, for X_0 step change

PID tuning: Ziegler-Nichols Method

- Advantages
  - Widely accepted
  - Robust
  - Quick-to-implement and less disruptive method
- Drawbacks
  - I and D depends purely on proportional measurements
  - Approximations for K_c, T_i and T_d - must be validated experimentally
  - Not suitable for I, D and PI controllers

Fast	K_c	T_i	T_d
P	$\frac{\tau}{\tau_d}$	–	–
I	$0.9\frac{\tau}{\tau_d}$	$3.33\,\tau_d$	–
D	$1.1\frac{\tau}{\tau_d}$	$2\,\tau_d$	$0.5\,\tau_d$

Normal	K_c	T_i	T_d
P	$0.44\frac{\tau}{\tau_d}$	–	–
I	$0.4\frac{\tau}{\tau_d}$	$5.33\,\tau_d$	–
D	$0.53\frac{\tau}{\tau_d}$	$4\,\tau_d$	$0.8\,\tau_d$

Slow	K_c	T_i	T_d
P	$0.26\frac{\tau}{\tau_d}$	–	–
I	$0.24\frac{\tau}{\tau_d}$	$5.33\,\tau_d$	–
D	$0.32\frac{\tau}{\tau_d}$	$4\,\tau_d$	$0.8\,\tau_d$

Testing model (µTurbomachine)

NI cDAQ 9174

NI Modules	
NI 9203	8-Ch **±20 mA**, 200 kS/s, 16-Bit **Analog Current Input** Module
NI 9205	32-Ch ±200 mV to **±10 V**, 16-Bit, 250 kS/s **Analog Input** Module
NI 9263	4-Channel, 100 kS/s, 16-bit, **±10 V**, **Analog Output** Module

I/O MODULES ⟷ **PC**

Control & Communication

Human-Machine Interfaces: µPower

1. Initialize

- Connect to the Shared Variables Engine
- Initialize variables and arrays
- Load default software and hardware setup from the configuration file
- 2D and 3D graphs

2. Main Processing

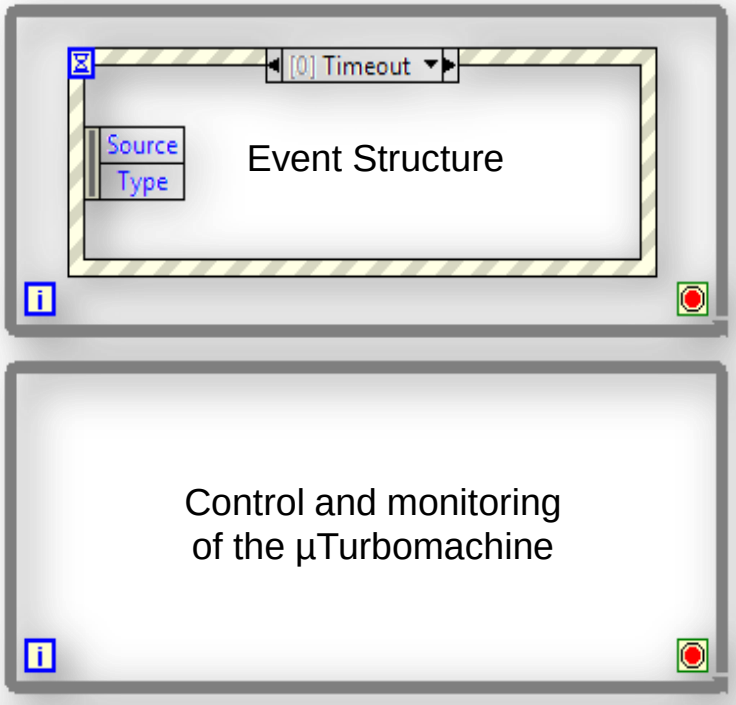

3. Shutdown

- Close connections to shared variables
- Set variables to default values
- Output channels to default values
- Save setup file

Human-Machine Interfaces: µPower

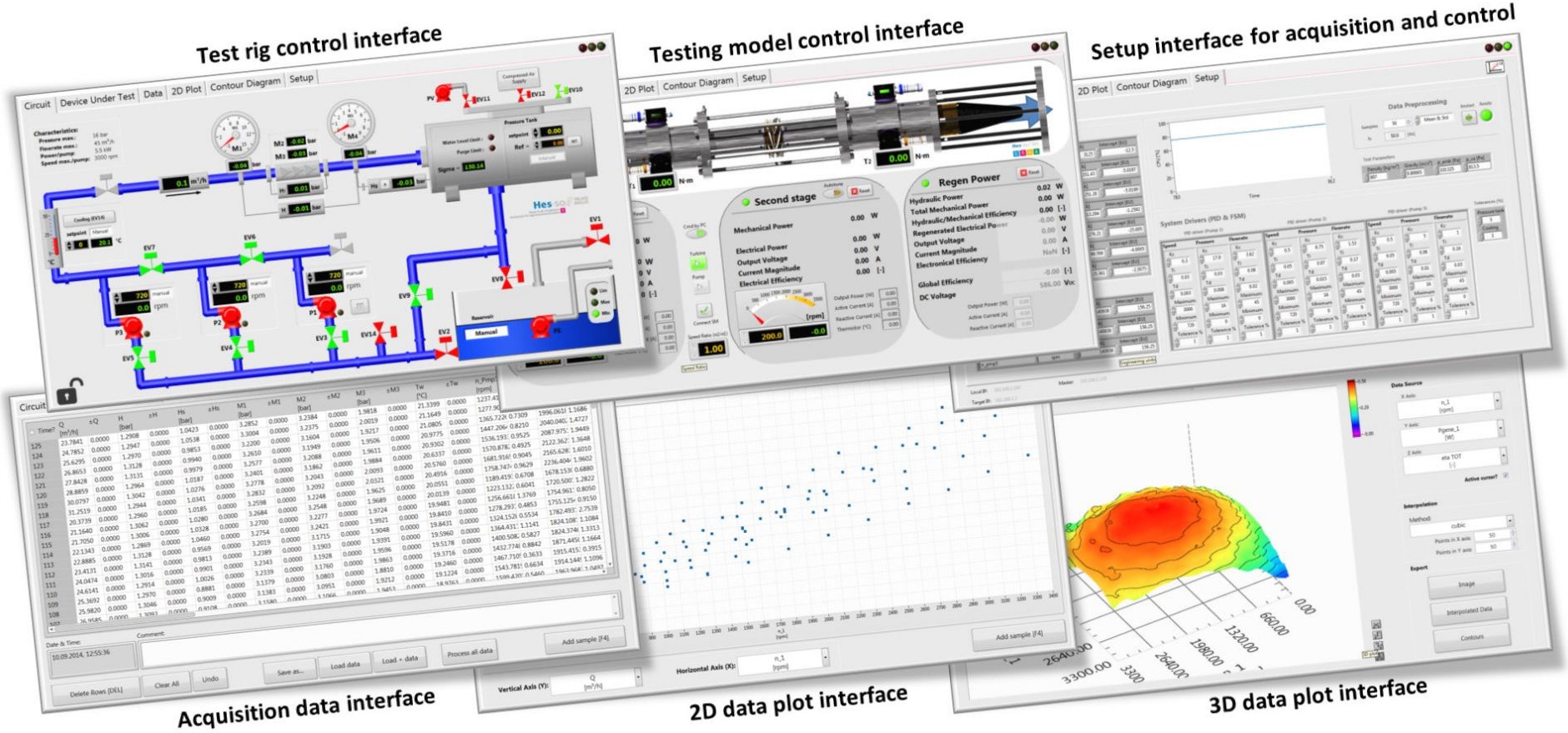

Example: counter-rotating microturbine

- Axial counter-rotating micro-hydro turbine [1] & [3]
- Rotational speed of runners controlled independently
- Fully instrumented laboratory prototype

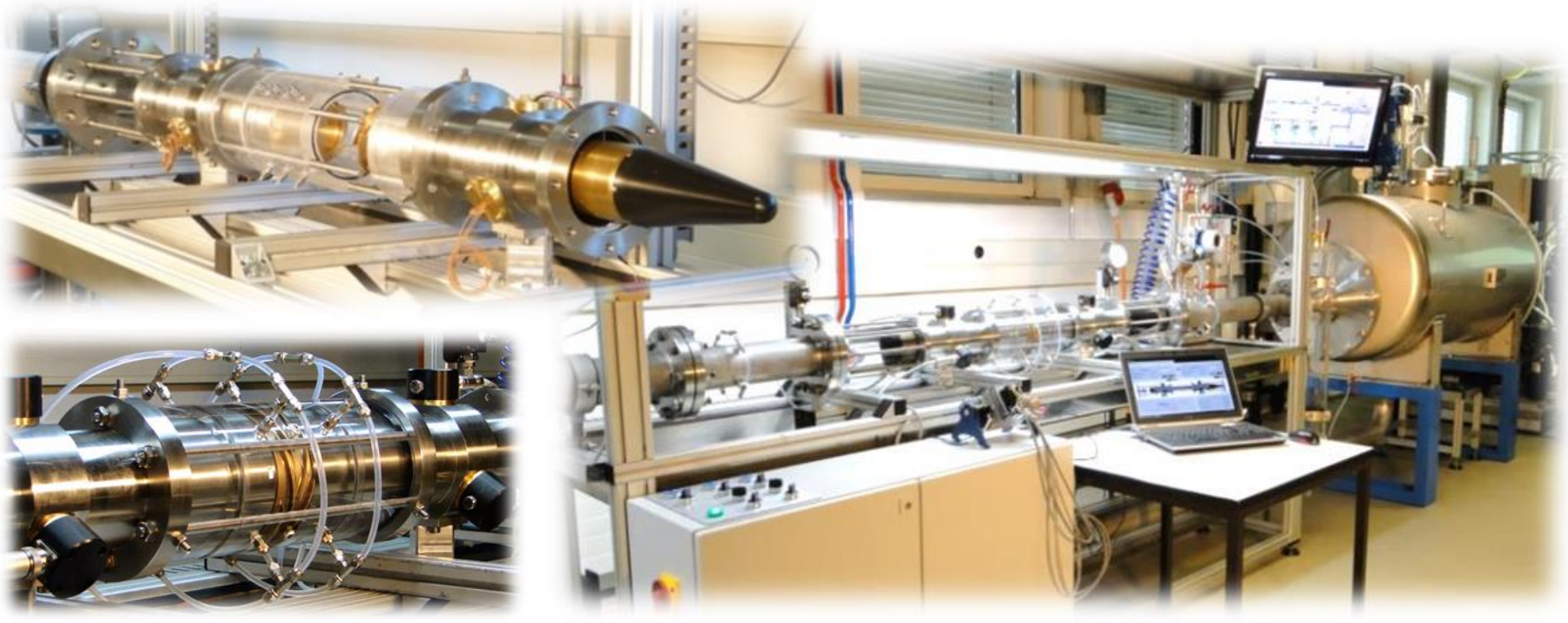

Example: counter-rotating microturbine

- Measured 2D and 3D hill-charts at constant test head

- Regulation: $\alpha = \frac{\omega_A}{\omega_B}$ [–]

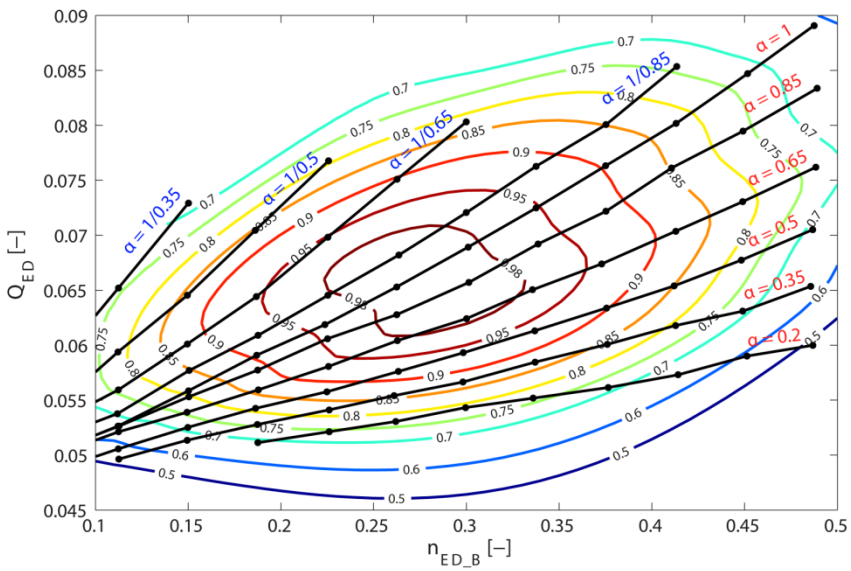

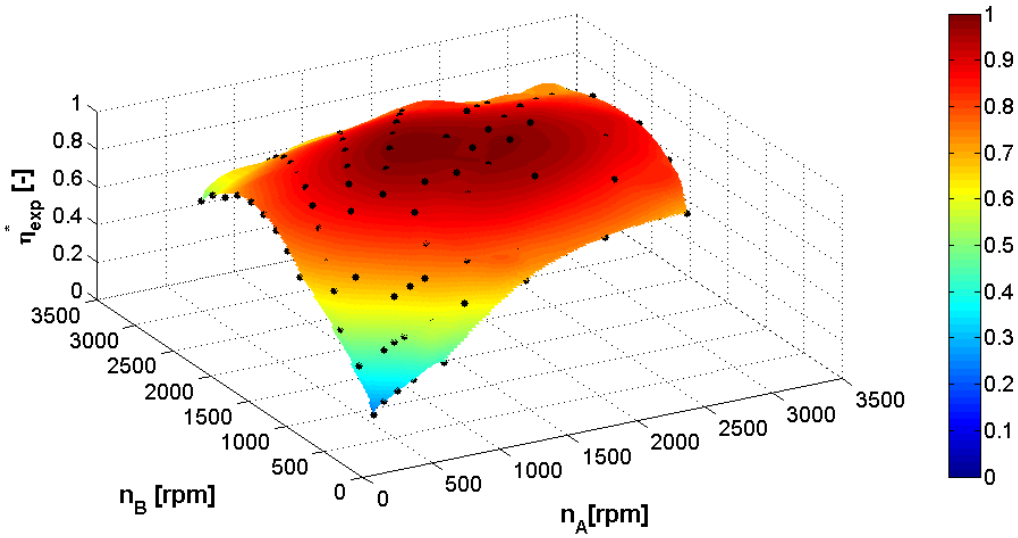

Example: pump-as-turbine

- 5-stage centrifugal pump (11 kW)

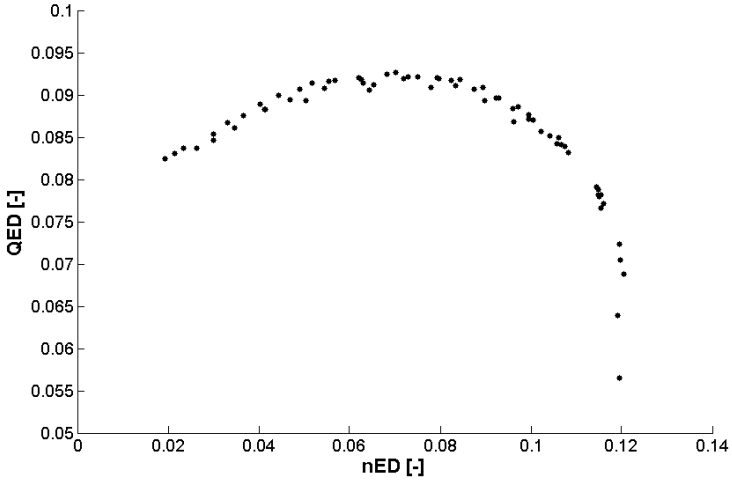

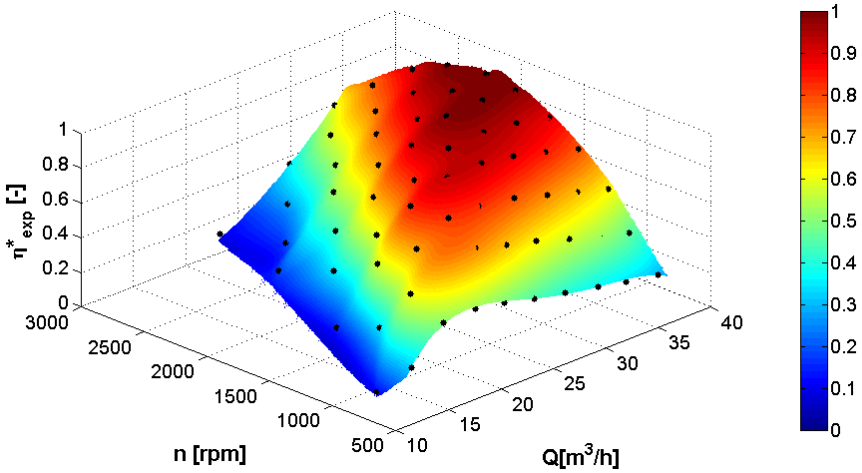

Conclusions

- New universal hydraulic test rig for small-power turbomachines designed, executed and assembled at the HES-SO VS
- The instrumentation follows the IEC 60193 standard recommendations
- State-of-the-art approach of an automatic regulation for test rigs has been introduced
- Equipped with an autonomous regulation system based on real-time measurements
- Wireless communication architecture and dedicated cloud of variables allows for safe data sharing, centralization and storage on model testing

Ongoing work

- Measurement precision improvement – avoid undesirable noise
- Integration of an automatic measurement interface
- Integration of an additional dynamic acquisition system or either of a high-speed visualization system for advanced hydrodynamic analysis
- Implementation of a dynamic measurement method of the testing model characteristics – e.g. the sliding gate method

References

- [1] Hasmatuchi V., Botero F., Gabathuler S., Münch C. (2014).
  Design and control of a new hydraulic test rig for small-power turbomachines.
  Hydro 2014, Cernobbio, Italy, Paper no. 14.5.

- [2] International Electrotechnical Committee. (1999).
  Hydraulic turbines, storage pumps and pump-turbines – Model acceptance tests.
  International Standard IEC 60193, 2nd Edition.

- [3] Münch-Alligné C., Richard S., Meier B., Hasmatuchi V., Avellan F. (2013).
  Numerical simulations of a counter rotating micro turbine.
  Advances in Hydroinformatics, P. Gourbesville et al. (eds.), Springer Hydrogeology.

Acknowledgments

- HES-SO Valais//Wallis – Systems Engineering Institute

- Hydro VS project

- Fluid Automation Systems – Palézieux, Switzerland

NIDays

CompactRIO Real-Time Control for Hydraulic Turbomachinery Model Testing

Vlad Hasmatuchi, HES-SO VS
Francisco Botero, EAFIT
Shadya Gabathuler, HES-SO VS
Cécile Münch, HES-SO VS