heig-vd
HAUTE ÉCOLE
D'INGÉNIERIE ET DE GESTION
DU CANTON DE VAUD
www.heig-vd.ch

IESE INSTITUT D'ÉNERGIE ET SYSTÈMES ÉLECTRIQUES

2nd International Conference on
Future Electric Power Systems and the Energy Transition
February 6, 2019

Application of Smart Monitoring and Control devices in the Low Voltage Utility Grid

Mauro Carpita
Mokhtar Bozorg

Hes·so
Haute Ecole Spécialisée
de Suisse occidentale

ReIne Laboratory

Context

In energy transition context, (development of renewable energies, phase-out of nuclear power and reduction of fossil sources, and so on) the low voltage network are facing:

- Stronger penetration of the distributed generation
- Presence of active consumer, or *prosumers*
- Introduction and continuation of the opening of the electricity market
- Increase in telecommunication and control capabilities

Image retrieved from McKinsey&Company, “Accelerating the energy transition: cost or opportunity?” Report, Sep. 2016.

These changes result in the arrival of intelligent network, more often called **SmartGrids**. This transition is not done instantly but over time, and to plan the upcoming evolution at best it is necessary to have **test platforms in order to be able to test proposed solutions**.

ReIne Laboratory

General Information

The **ReIne laboratory** (ReIne for *Réseau Intelligent*, French for smartgrid) is a platform that allows the emulation of a great number of different network topologies, in order to test smartgrid control methods as well as power electronic devices under various and controlled load and generation constraints.

Technical Characteristics

Voltage level	**230 / 400V**
Topology	8 lines arranged in a controllable matrix and a 9th free
Line type	Emulated with discrete inductors (resistors and capacitors can be added)
Nominal Power	100kVA
Nominal line current	145A
Equipments	Loads and various production devices, real and simulated
Standards	NIBT 2015
Control	1) Centralized with SCADA; 2) Distributed Grideye modules from DEPsys
Utilisation	Research and educational

ReIne Laboratory

Pecularities

- **Flexible structure**
  - ✓ Reconfiguration of the network topology
  - ✓ Connection points of different sources and charges
- **Monitoring with a high frequency sampling (50 kHz)**
- **Data acquisition based on GPS synchronization that allows precise synchronization of each.**

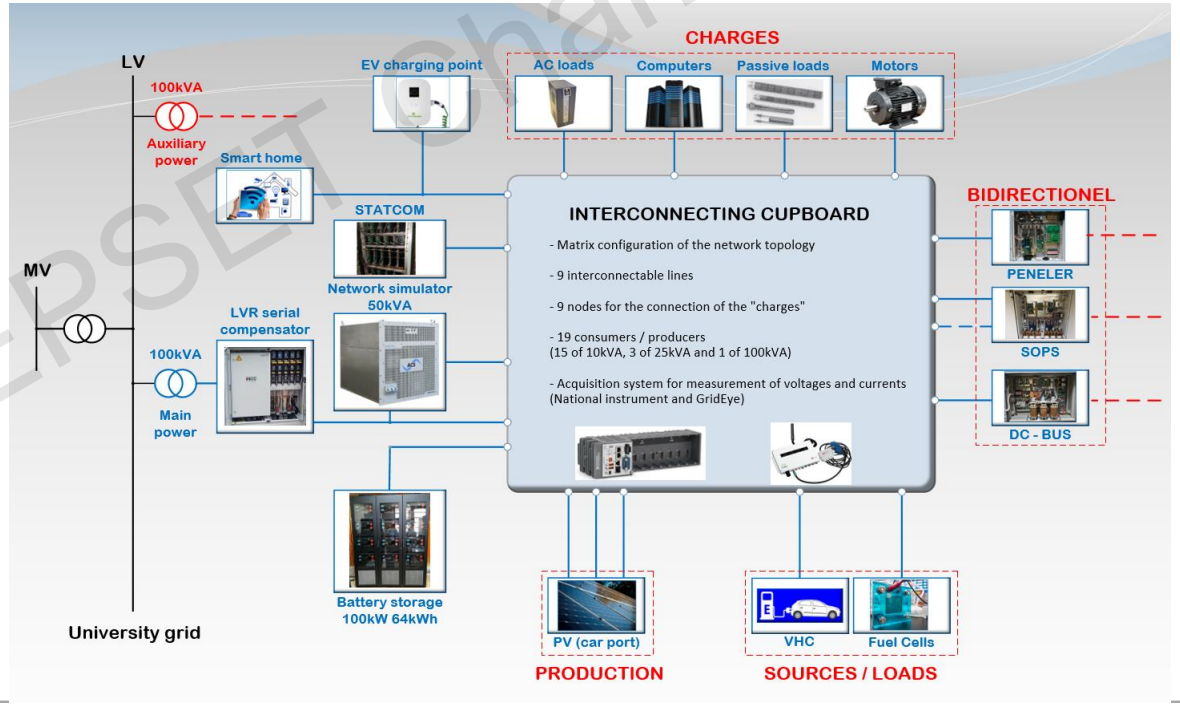

ReIne Laboratory

Reconfigration capability

The network part of the laboratory is made of 8 lines positioned in a matrix and a 9th line that can be connected freely between two desired nodes.

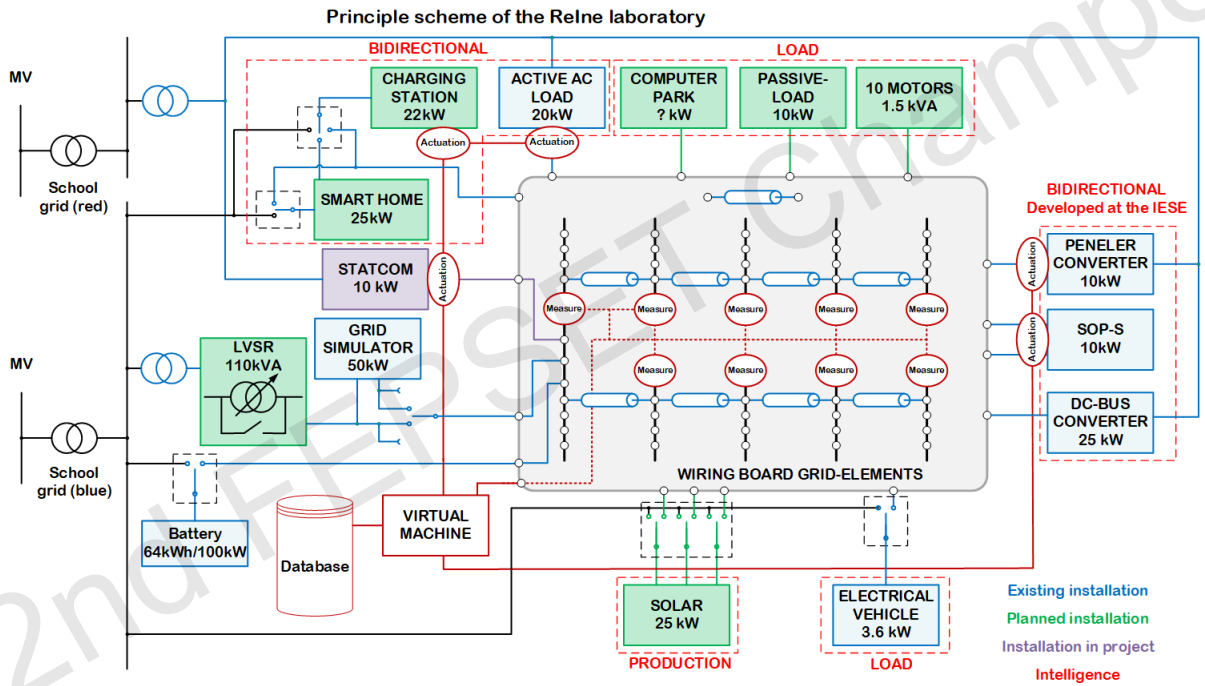

ReIne Laboratory

Reconfigration capability

The configuration of the network to the chosen topology is made via the SCADA and is realized in a remote-controlled wiring board. This board also enable the users to connect all the different devices to the wanted node, every node being available.

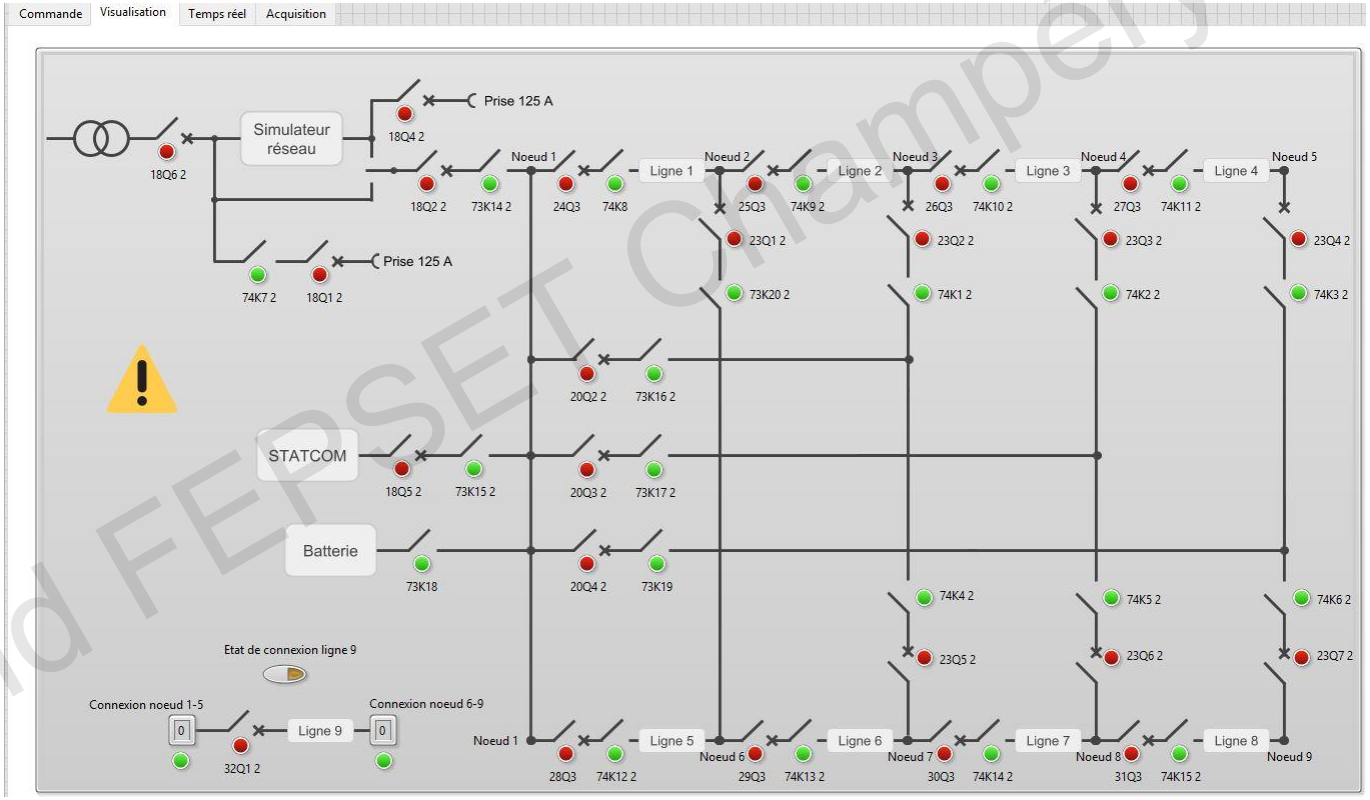

Snippet of the user interface of the SCADA

ReIne Laboratory

Reconfiguration Capability

- Examples of topologies achievable: 1) Partially meshed grid, 2) District, 3) Meshed grid

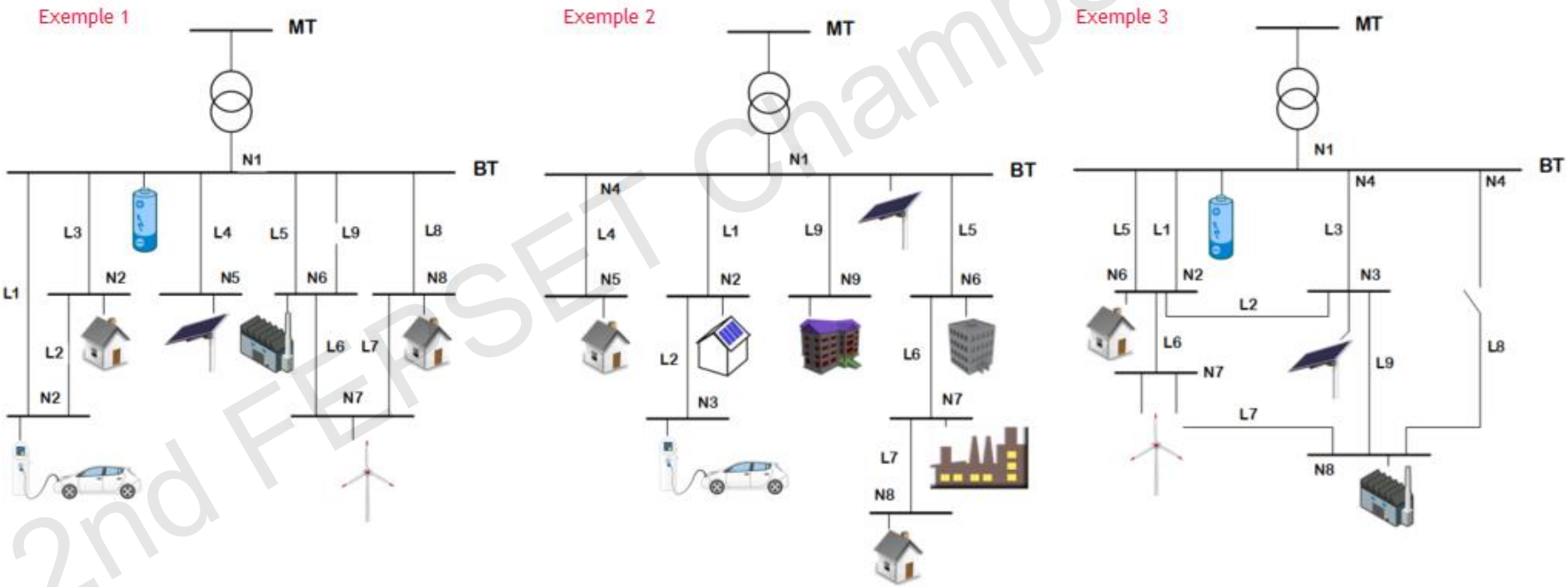

ReIne Laboratory

Power Supply

1. **School grid power supply**
2. **Network simulator**

4-quadrant REGATRON TopCon TC.ACS	
Nominal power	50 kVA
Phase-neutral voltage	Up to 280 V
Nominal current	72 A
Frequency	Up to 1 kHz
Harmonics	Up to 5 kHz
Possibility to generate	Asymmetrical voltages Short-term failure Flicker Balanced or unbalanced voltage drop

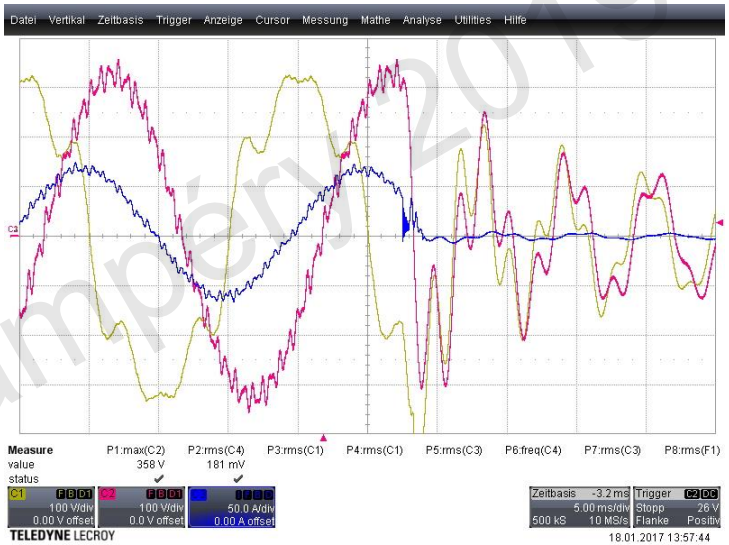

Example of a voltage profile obtained with the network simulator

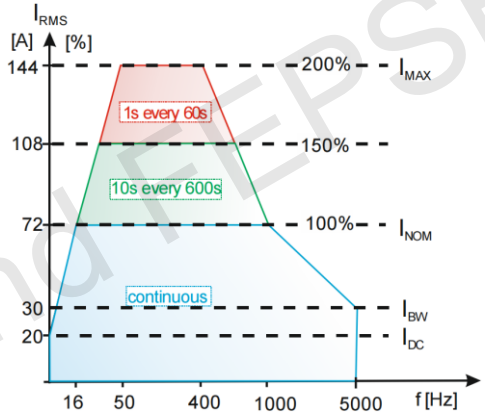

Overloadability versus frequency

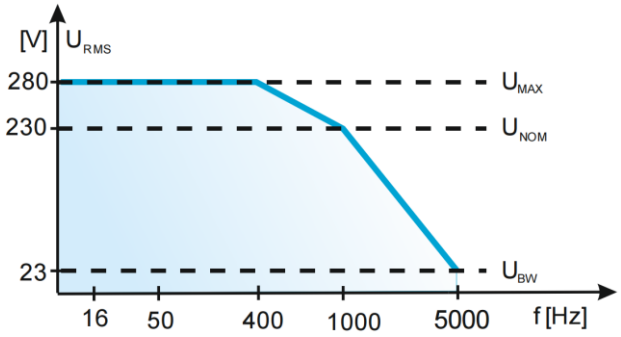

Output voltage versus frequency

ReIne Laboratory

Connected Devices

Smart Home

Aims

- Educational purposes
- Test of industrial devices
    - Measurement devices (e.g., smart-meters)
    - Performance tests on household appliances
    - System service strategy tests, …

Characteristics

- ✓ Photovoltaic installation (a part of the panels of the solar carport with a converter *IMEON 3.6*)
- ✓ AC battery for energy storage (*PowerLegato* from AUO)
- ✓ water-heater that can be connected to the photovoltaic installation (*HeatMaster AP 207 CT*)
- ✓ A refrigerator-freezer (*TK80LA++* de Kibernetik), cooking plates, dishwasher, and one electric oven

ReIne Laboratory

Connected Devices

Battery Energy Storage System

Battries can be connected to the ReIne laboratory at any node of the network.

TiRack Leclanché storage with BAT100 FeCon converter	
Capacity	63 kWh
Technology	Lithium-titanate
Converter power	120 kVA
Available active power	100 kW

ReIne Laboratory

Connected Devices

Carport

- ✓ 85 solar panels Bisol 295 Wc are installed. 12 panels dedicated to the smart home production (i.e., 3540 Wc).
- ✓ Possibility to generate capacitive or inductive current.

- ✓ Charging station for electric vehicle from GreenMotion.
- ✓ Adjustable power between 3.7 and 22 kW.

ReIne Laboratory

Connected Devices

AC Load

Motors

Devices developed at the IESE institute:

MMC Statcom

PENELER

DC-Bus

Soft Open Point with Storage (SOPS)

…

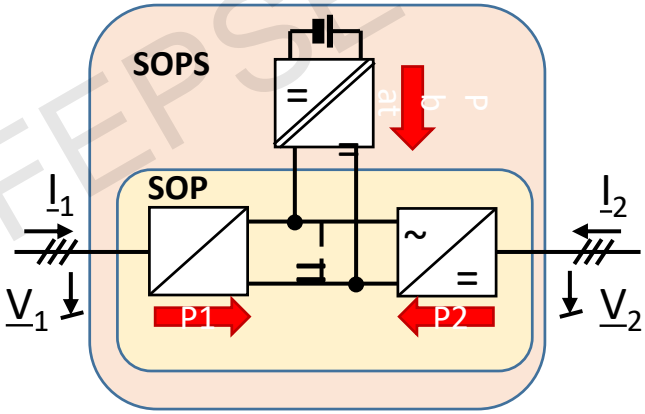

SOPS Schematic

10 kVA SOPS connected to the ReIne Laboratory

ReIne Laboratory

Network Measurements

Two parallel set of measurement devices and data acquision systems are installed.

1. Natinal instrument measurement system

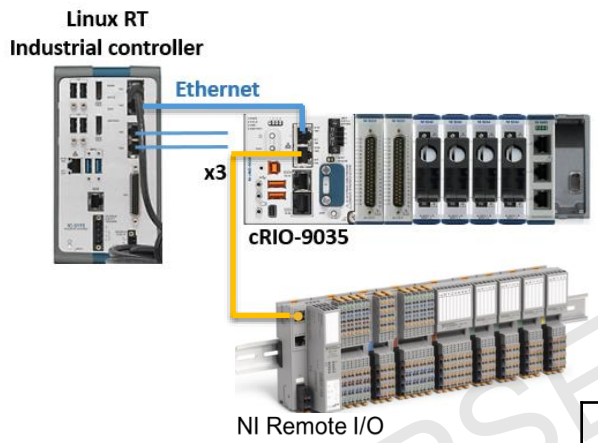

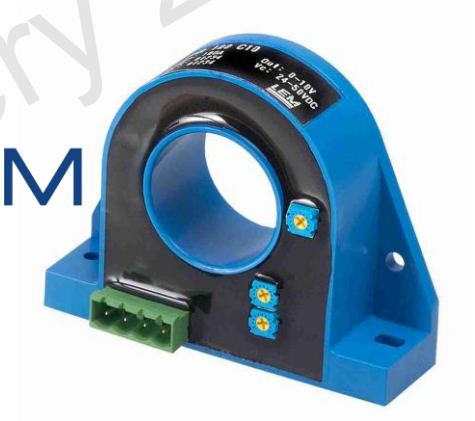

	National Instrument	LEM
Current measurements (31 x 3)	NI 9220 - 100 kS/s/ch, 16-Bit, Simultaneous Input	DHR séries (DC…20-6kHz), 1% Acc
Voltage measurements (10 x3)	NI 9244 - 400 Vrms L-N, 50 kS/s/ch, 24-Bit	
GPS synchronization	NI 9467 - Pulse per second (PPS) accuracy of ±100 ns, >99 percent typical	
Chasis CompactRIO	IC-3173 Linux RT i7; Crio 9035 (x3); REM	
Others	NI 9263 Pilotage Simulateur réseau	

ReIne Laboratory

Network Measurements

Two parallel set of measurement devices and data acquision systems are installed.

2. GridEye system from DEPsys

GridEye devices from DEPsys are installed in 5 selected nodes/lines of the ReIne Laboratory.

GridEye deveice; Measurement and communication

GridEye Server

Application Projet SMILE-FA

2017-2019

SMILE-FA: The theoretical and application Study on a Metering and Intelligent tool for Low Voltage grid control Enhancement – Flexibility Assessment

Objective

Aim of this project is to develop low voltage network regulation algorithms, to implement in a decentralized measurement and regulating tool, Grideye.

Principal Activities

- Improvement of the **control algorithms** of the LV network based on the **estimation of the sensitivity coefficients** without grid model.
- **Testing of new algorithms in the ReIne laboratory**. This laboratory allows tests to be carried out in **a known environment**.
- Development of **protection strategies** against **cyberattacks**, to be tested also in the new REINE laboratory of the HEIG-VD.

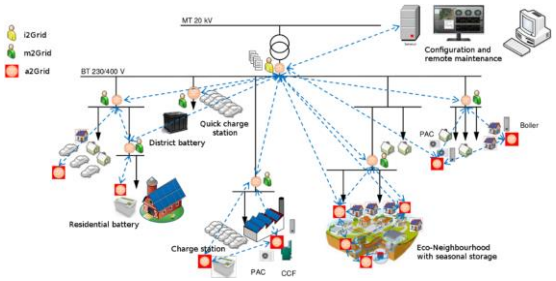

Partners

HAUTE ÉCOLE D'INGÉNIERIE ET DE GESTION DU CANTON DE VAUD
www.heig-vd.ch

DEPSYS Rethink energy

ÉCOLE POLYTECHNIQUE FÉDÉRALE DE LAUSANNE

iICT INSTITUTE FOR INFORMATION AND COMMUNICATION TECHNOLOGIES

Schweizerische Eidgenossenschaft
Confédération suisse
Confederazione Svizzera
Confederaziun svizra
Swiss Federal Office of Energy SFOE

Application Projet SMILE-FA

2017-2019

Methods for estimation of Voltage Sensitivity Coefficient with respect to nodal active and reactive power:

$$K_{PV,ij} := \frac{\partial|\bar{E}_i|}{\partial P_j}, K_{QV,ij} := \frac{\partial|\bar{E}_i|}{\partial Q_j}$$

$$\Delta|\bar{E}_i| \approx \sum_{g\in G} K_{P,ig}\Delta P_g + K_{Q,ig}\Delta Q_g$$

Model-Aware Methods

1. Direct computation from the inverse of the Jacobian matrix

$$J(t) = \begin{pmatrix} \frac{\partial \boldsymbol{P}}{\partial \boldsymbol{\theta}}(t) & \frac{\partial \boldsymbol{P}}{\partial |\bar{\boldsymbol{E}}|}(t) \\ \frac{\partial \boldsymbol{Q}}{\partial \boldsymbol{\theta}}(t) & \frac{\partial \boldsymbol{Q}}{\partial |\bar{\boldsymbol{E}}|}(t) \end{pmatrix}$$

It requires line parameters (Ybus matrix), and voltage phasor at the operation point.

Application Projet SMILE-FA

2017-2019

Methods for estimation of Voltage Sensitivity Coefficient with respect to nodal active and reactive power:

$$K_{PV,ij} := \frac{\partial |\bar{E}_i|}{\partial P_j}, K_{QV,ij} := \frac{\partial |\bar{E}_i|}{\partial Q_j}$$

$$\Delta |\bar{E}_i| \approx \sum_{g \in G} K_{P,ig} \Delta P_g + K_{Q,ig} \Delta Q_g$$

Model-Aware Methods

2. A simplified iterative approach based on Gauss-Seidel technique [Zhou and Bialec, PSCC 2008]

It requires line parameters (Ybus matrix), and iteratively updates the value of sensitivity coefficients based on Gauss-Seidel load flow solution.

Application Projet SMILE-FA

2017-2019

Methods for estimation of Voltage Sensitivity Coefficient with respect to nodal active and reactive power:

$$K_{PV,ij} := \frac{\partial |\bar{E}_i|}{\partial P_j}, K_{QV,ij} := \frac{\partial |\bar{E}_i|}{\partial Q_j}$$

$$\Delta |\bar{E}_i| \approx \sum_{g \in G} K_{P,ig} \Delta P_g + K_{Q,ig} \Delta Q_g$$

Model-Aware Methods

3. An analytical method adopted for distribution grids [Christakou et al., IEEE Tr. SG, 2013]

Application Projet SMILE-FA

2017-2019

Methods for estimation of Voltage Sensitivity Coefficient with respect to nodal active and reactive power:

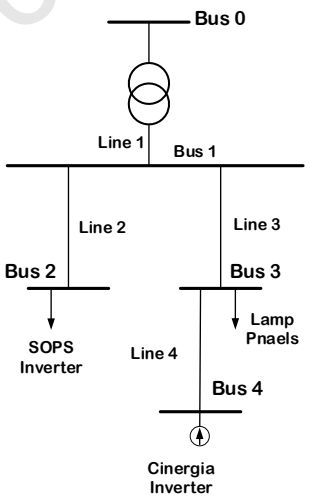

$$K_{PV,ij} := \frac{\partial|\overline{E}_i|}{\partial P_j}, K_{QV,ij} := \frac{\partial|\overline{E}_i|}{\partial Q_j}$$

$$\Delta|\overline{E}_i| \approx \sum_{g\in G} K_{P,ig}\Delta P_g + K_{Q,ig}\Delta Q_g$$

Model-Aware Methods

4. An approximate method based on line impedances [Brenna et al., IEEE Tr. SG, 2013]

$$K_{PV,ij} = \frac{1}{\overline{E}_n}\left(\sum_{hk\in PT_{ij}} R_{hk}\right) K_{QV,ij} = \frac{1}{\overline{E}_n}\left(\sum_{hk\in PT_{ij}} X_{hk}\right)$$

PT_{ij}: The set of nodes contained in the “path” composed of the branches in which flow the active and reactive powers absorbed by node i and node j.

Application Projet SMILE-FA

2017-2019

Methods for estimation of Voltage Sensitivity Coefficient with respect to nodal active and reactive power:

$$K_{PV,ij} := \frac{\partial|\bar{E}_i|}{\partial P_j}, K_{QV,ij} := \frac{\partial|\bar{E}_i|}{\partial Q_j}$$

$$\Delta|\bar{E}_i| \approx \sum_{g \in G} K_{P,ig}\Delta P_g + K_{Q,ig}\Delta Q_g$$

Model-Less Method

5. A model-less method based on the Generalized Least Square (GLS) approach using grid measurement data

[J. Jaton, G. Besson, M. De Vivo, M. Carpita, M. Paolone, K. Christakou, C. Mugnier and O. Alizadeh-Mousavi, World Patent 182918, 26 10 2017]

Application Projet SMILE-FA

2017-2019

Test Case Implemented in the ReIne Laboratory

Bus Data

Bus Number	Bus Name (ReIne)	Nominal voltage (RMS LN) [V]	Connected installation	Installation connection name (ReIne)
0	-	230	-	-
1	N1	230	-	-
2	N3	230	SOPS Inverter	Resource 9
3	N6	230	Lamp Panels	Resource 7
4	N9	230	Cinergia Inverter	Resource 8

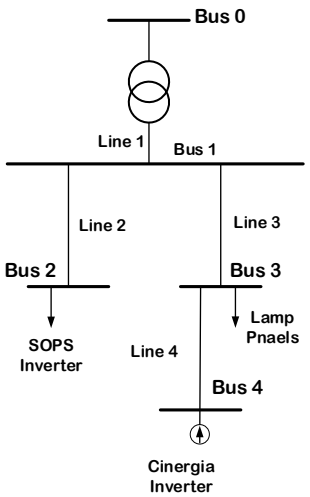

Line Data

Line Number	Line name (ReIne)	From bus	To bus	R (pu) Phase 1U	X (pu) Phase 1U	R (pu) Phase 2V	X (pu) Phase 2V	R (pu) Phase 3W	X (pu) Phase 3W	Current Limit per phase (Imax) [A]
1	-	1	0	1.23 e-3	5.81 e-4	1.23 e-3	5.08 e-4	1.23 e-3	5.08 e-4	33.35
2	L1+ L2	1	2	7.36 e-6	2.31 e-3	7.42 e-6	2.33 e-3	7.41 e-6	2.33 e-3	34.50
3	L5	1	3	3.67 e-6	1.15 e-3	3.71 e-6	1.16e-3	3.72e-6	1.17 e-3	34.50
4	L4+ L6+ L7	3	4	6.73 e-4	3.56 e-3	6.73 e-4	3.55 e-3	6.73 e-4	3.55 e-3	34.50

Application Projet SMILE-FA

2017-2019

Test Case Implemented in the ReIne Laboratory

Nodal Power Injections/Absorbtions

Bus 2: Aggregating residential power consumption according to data from a low voltage grid in Chapelle, Switzerland.

Bus 3: Piece-wise constant load

Bus 4: PV generation

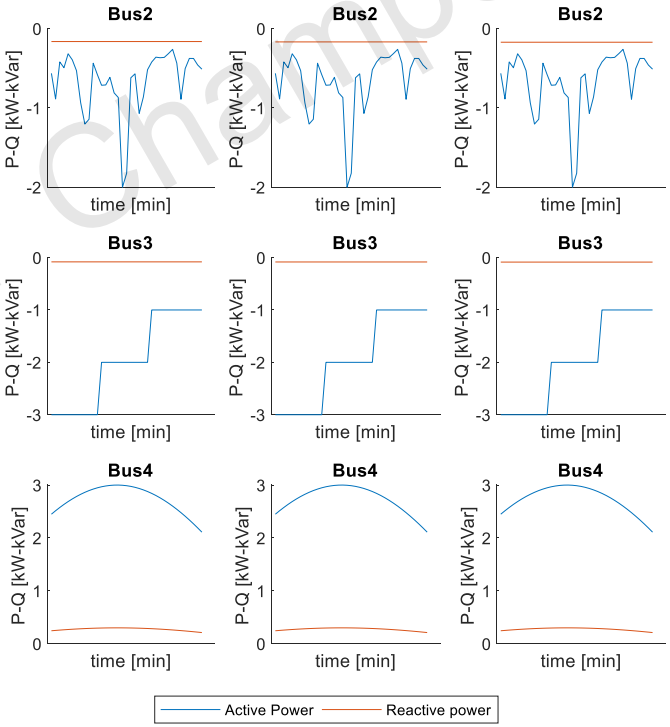

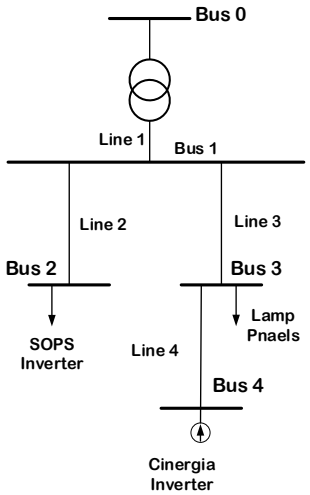

Application Projet SMILE-FA

2017-2019

Pre-Validation Simulations – NR Load Flow

Model Aware Methods (Kvp)

Kvp(i,j) – Reference (Jacobian)	i = 1	i = 2	i = 3	i = 4
j = 1	0.2722	0.2725	0.2719	0.2686
j = 2	0.2723	0.2751	0.2720	0.2687
j = 3	0.2721	0.2725	0.2725	0.2643
j = 4	0.2714	0.2718	0.2718	0.4070

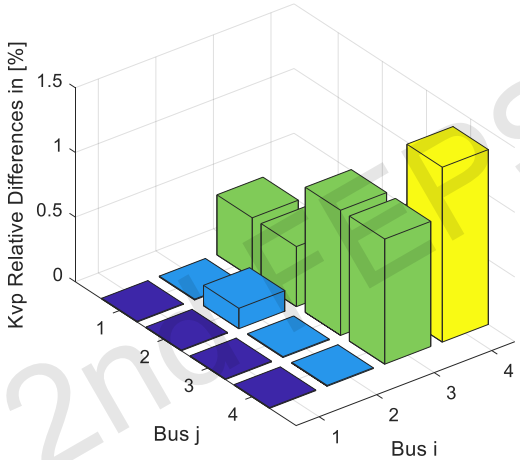

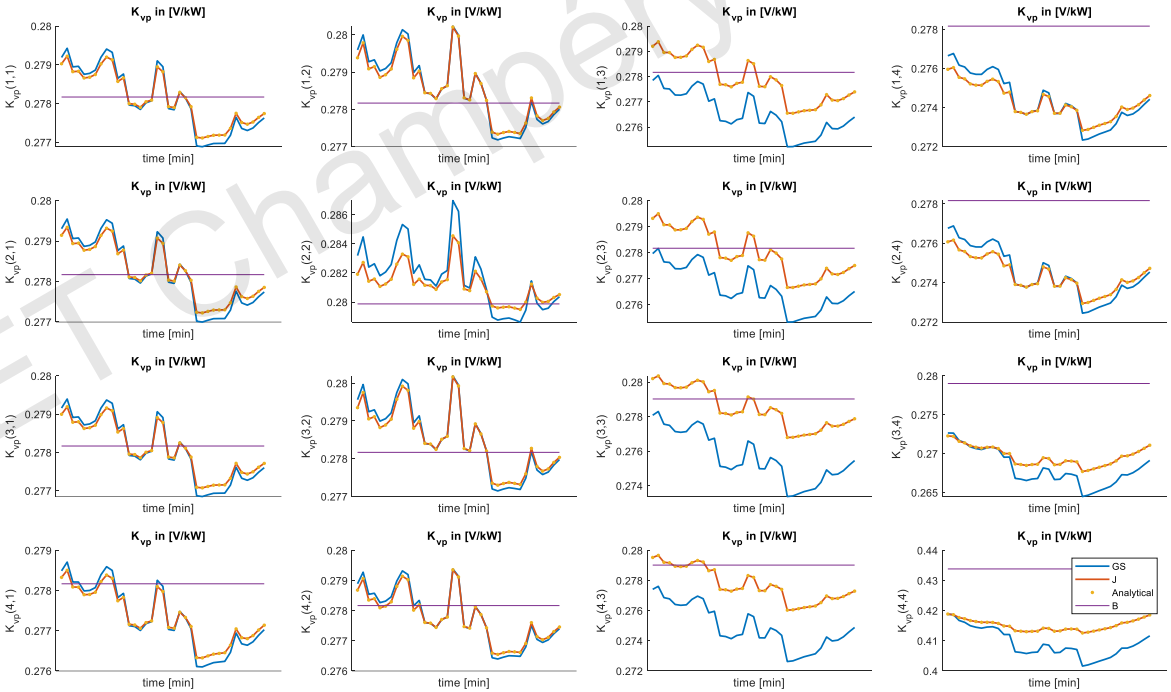

Relative differences between the sensitivity coefficients computed based on the Gauss-Seidel method and the reference values in [%]

Application Projet SMILE-FA

2017-2019

Pre-Validation Simulations – NR Load Flow

Model Aware Methods (Kvq)

Kvq(i,j) – Reference (Jacobian)	i = 1	i = 2	i = 3	i = 4
j = 1	0.1308	0.1309	0.1307	0.1304
j = 2	0.1308	0.6556	0.1308	0.1305
j = 3	0.1307	0.1308	0.3937	0.3930
j = 4	0.1304	0.1305	0.3927	1.1909

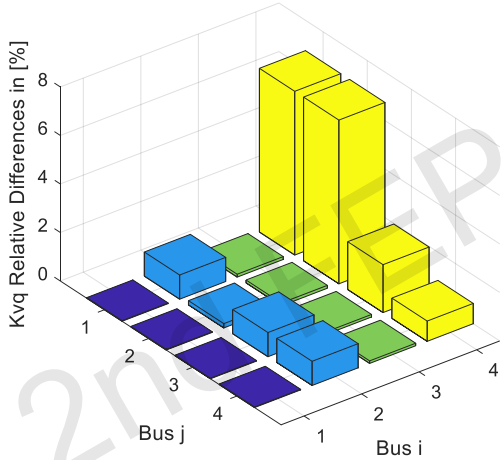

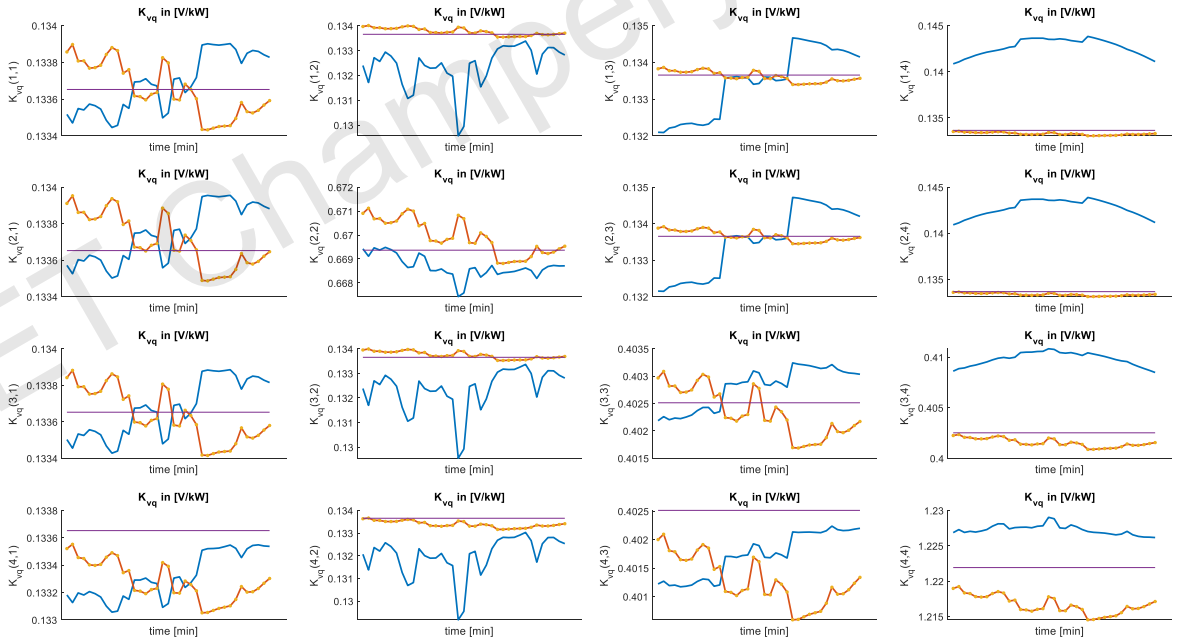

Relative differences between the sensitivity coefficients computed based on the Gauss-Seidel method and the reference values in [%]

Application Projet SMILE-FA

2017-2019

Measurement data processing

Raw measurement sampling: 50 kHz (20 us)

10-cycle data

For currents and voltages, 10000 samples are recorded, RMS values are calculated according to:

$$x_{10-cycle,rms} = \sqrt{\frac{1}{n}\left(\sum_{0}^{n=10000} x_n^2\right)}$$

For active power, instantaneous values of current and voltage are multiplied and aggregated over 10000 samples:

$$P_a = \frac{1}{n}\sum_{0}^{n=10000} u_n i_n$$

10 minutes data

10 min RMS values are calculated according to the IEC 61000-4-30. Real power is assessed according to power triangle formula:

$$|S_{10-cycle}| = I_{10-cycle,RMS} \times U_{10-cycle,RMS}$$

$$|Q_{10-cycle,RMS}| = \sqrt{S_{10-cycle,RMS}^2 - P_{10-cycle,RMS}^2}$$

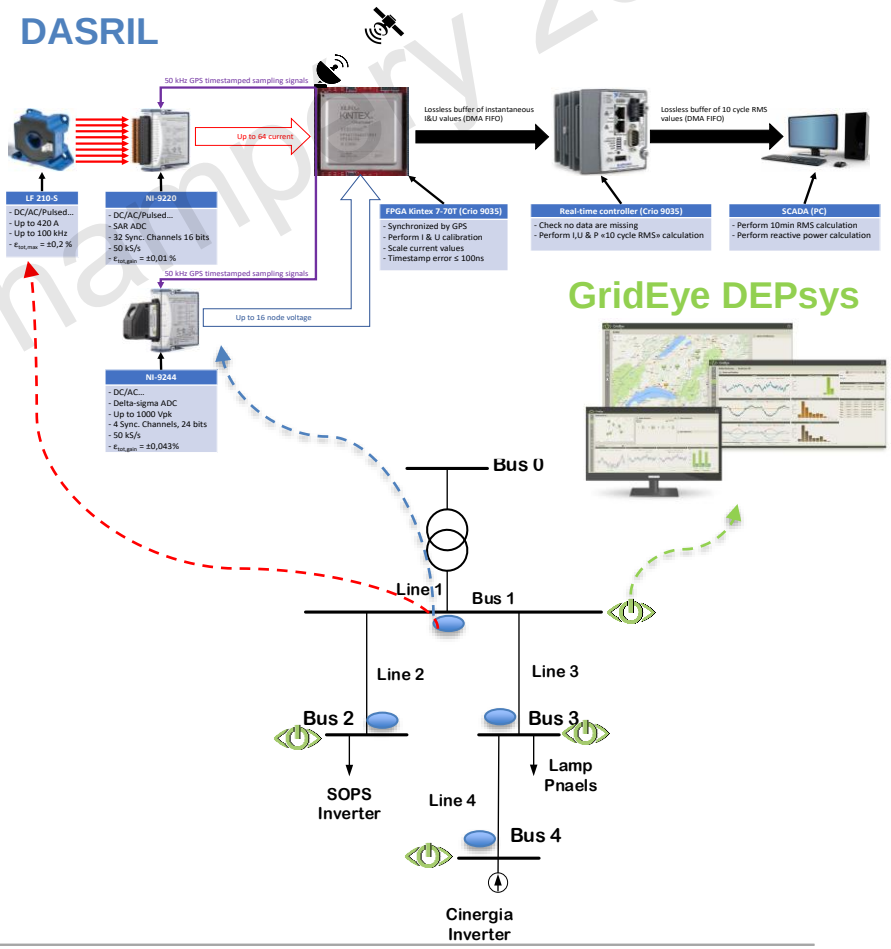

Application Projet SMILE-FA

2017-2019

Validation Tests in the ReIne Laboratory

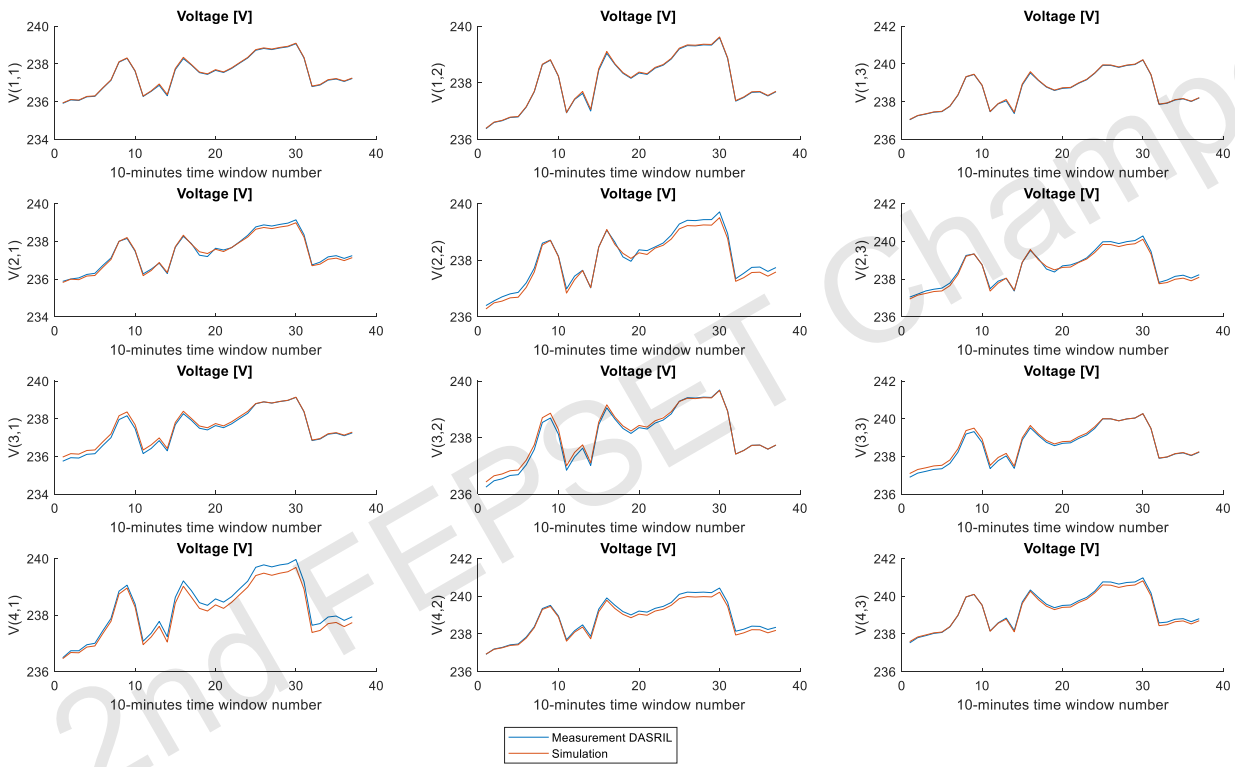

DASRIL voltage measurements vs power flow simulation results. V(b,φ): voltage at bus b, phase φ

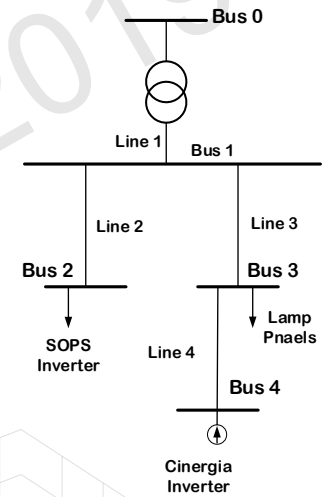

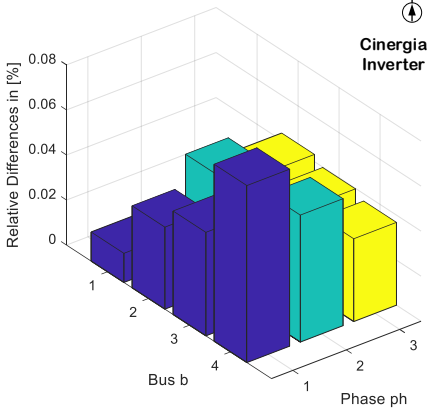

Relative differences between the measured voltages and voltage computation based on power flow simulation in [%]

Application Projet SMILE-FA

2017-2019

Validation Tests in the ReIne Laboratory - SC Computation Results

Model Aware Methods (Kvp)

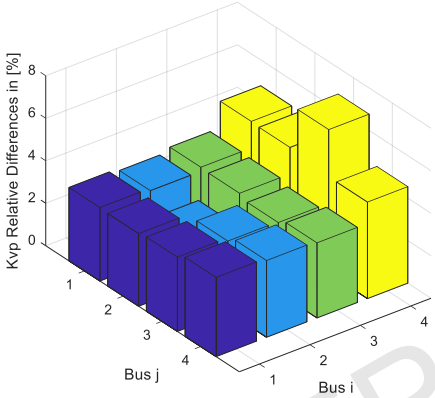

Relative differences between the sensitivity coefficients computed based on the model-less method and the reference values in [%]

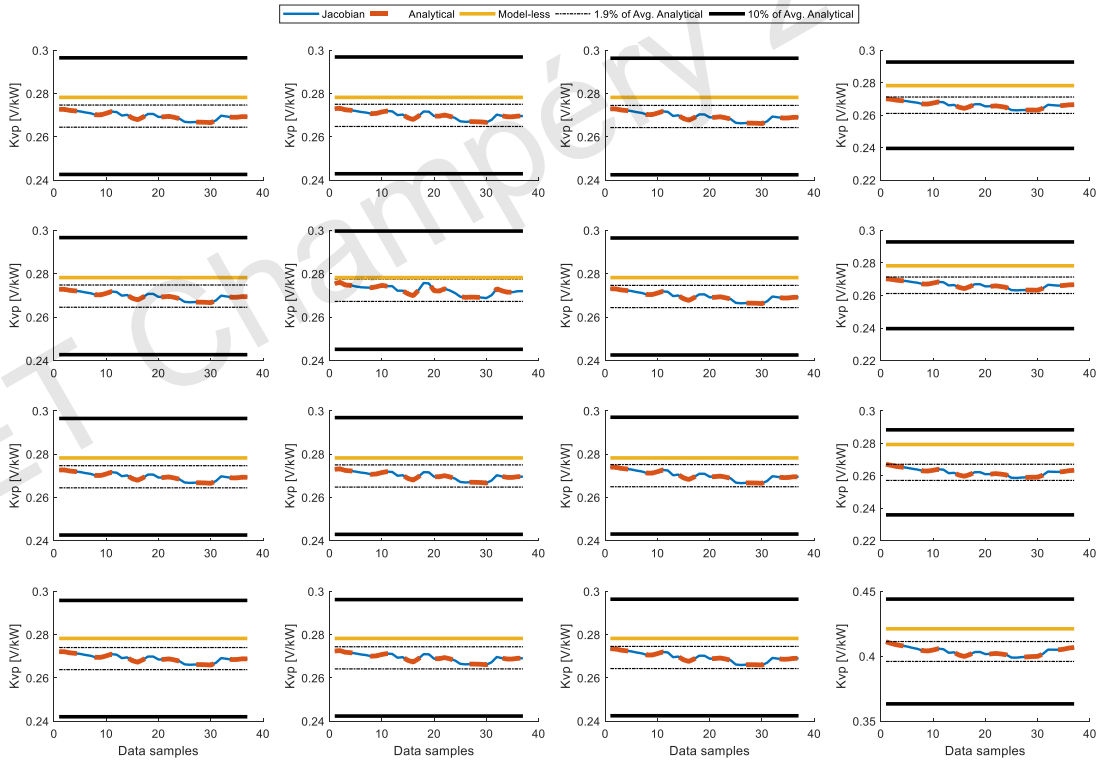

Application Projet SMILE-FA

2017-2019

Real field validation – DEPsys contribution

Voltage Control Based on Sensitivty Coefficients

In this case, the **PV installation** has caused the risk of **overvoltage** within the network. The DSO needs to ensure that voltages remain within the acceptable levels while the production of the PV installations are maximized. Here, the **reactive power capability of the inverters** are initially used for the **voltage control** and then **if it is needed the active power curtailment** is considered.

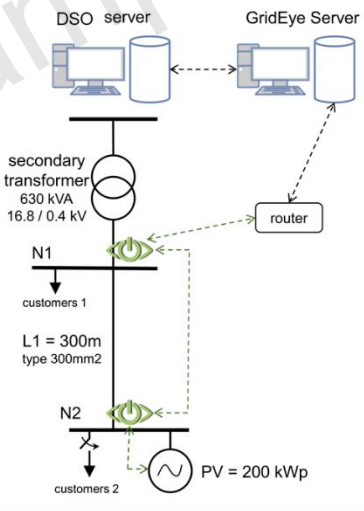

Application Projet SMILE-FA

2017-2019

Real field validation – DEPsys contribution

Voltage Control Based on Sensitivty Coefficients

Results

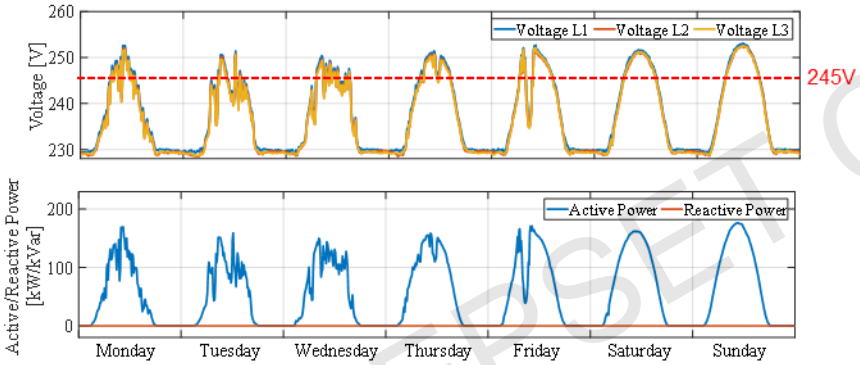

Voltage and power profiles without control

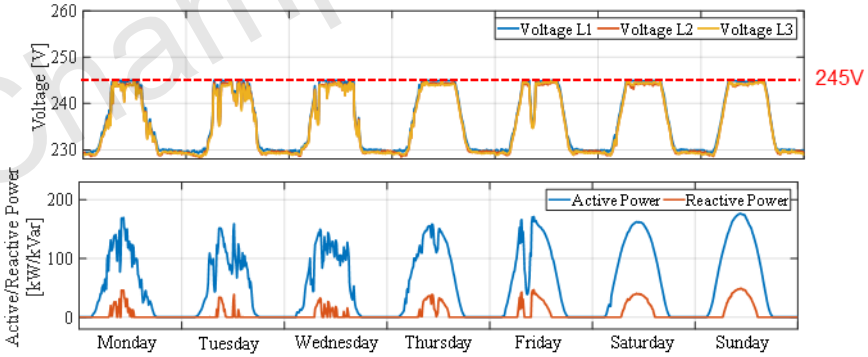

Voltage and power profiles using GridEye "optimal" control

Voltage profiles at node 2 as well as the PV inverters active and reactive power outputs for the case without control (left) and the case using the GridEye optimal control (right).

Application Projet SMILE-FA

Conclusions and Future Works

- The methods of computation of voltage sensitivity coefficients with respect to active and reactive power injections are tested and validated under known operational conditions in the ReIne laboratory of HEIG-VD.

- The results of validation test shows that the relative differences between the sensitivity coefficients are good and testify the worthy performances of the model-less method.

- Next step: Further tests for resistive networks to emulate more realistic LV distribution grids.

Thanks for your attention!