Brandenburgische
Technische Universität
Cottbus - Senftenberg

Finite-Time Estimation of Time-Varying Frequency Signals in Low-Inertia Power Systems

J. G. Rueda-Escobedo[1], J. A. Moreno[2], **J. Schiffer**[1]

[1] Brandenburg University of Technology Cottbus-Senftenberg
[2] Universidad Nacional Autónoma de México

Champéry, February, 7 2019

Motivation - Decreasing conventional actuation

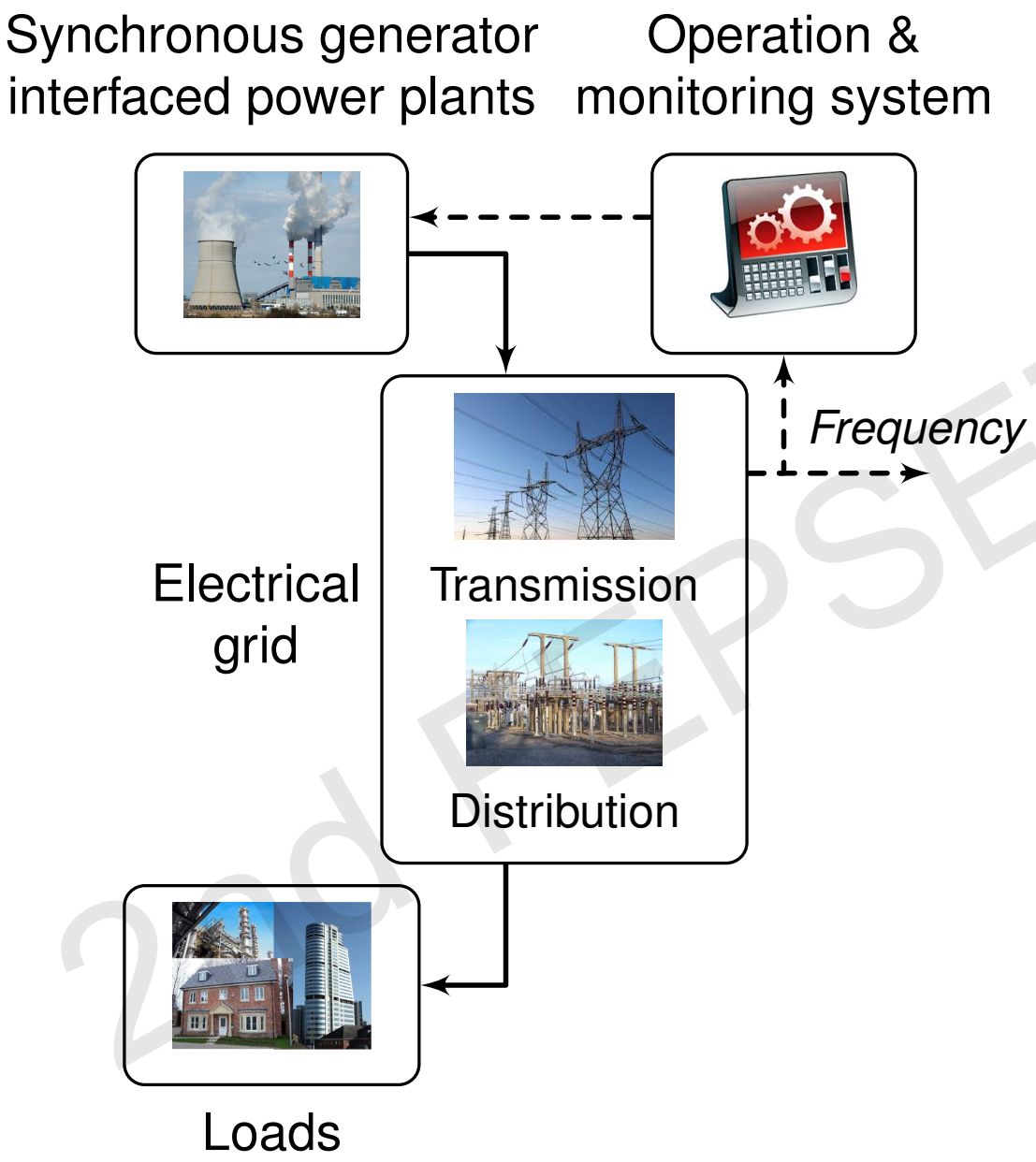

Motivation - Decreasing conventional actuation

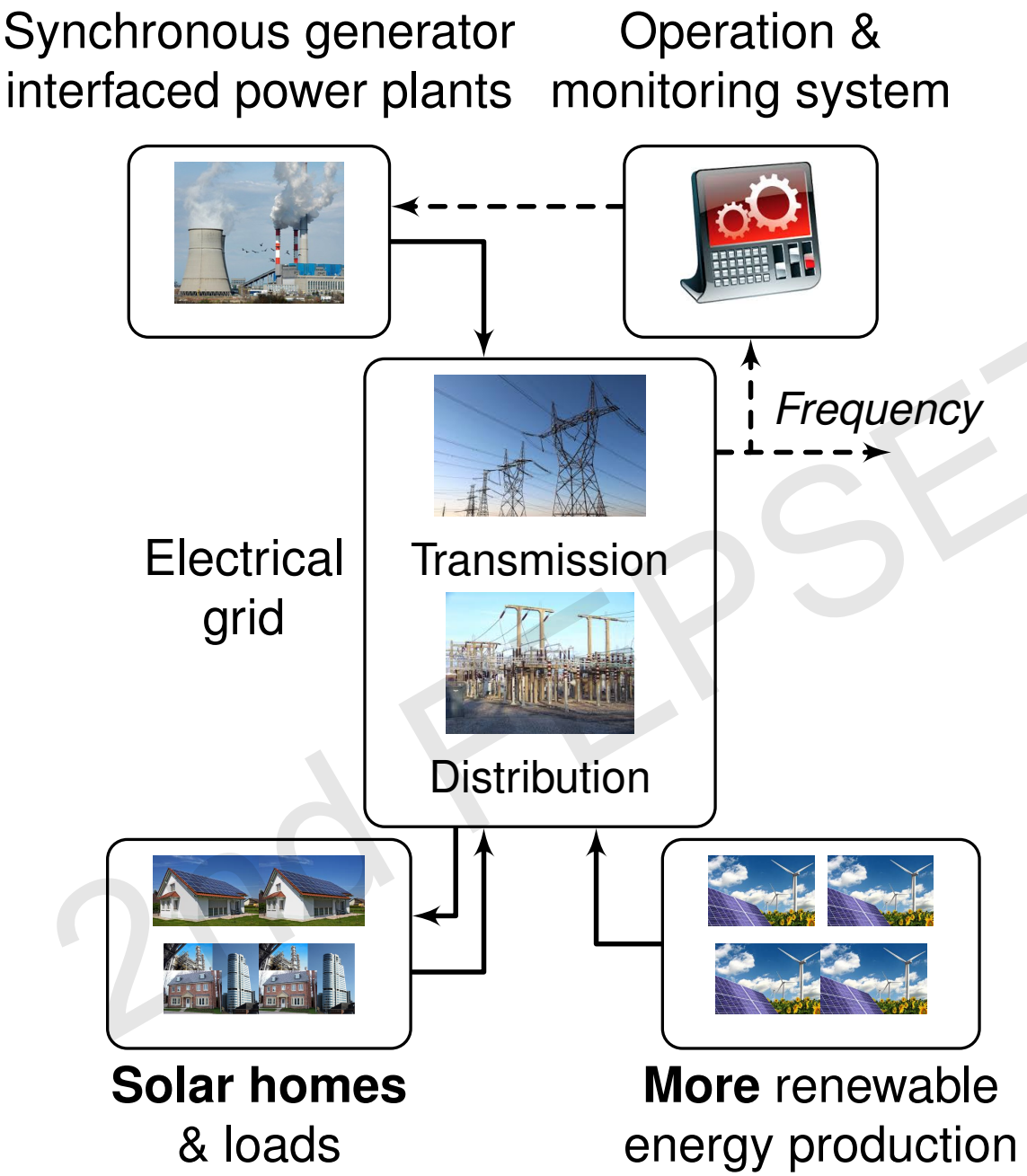

- → Decreasing conventional actuation power
- → Inverter-interfaced (renewable) units need to participate in frequency control

Frequency support by inverter-interfaced units

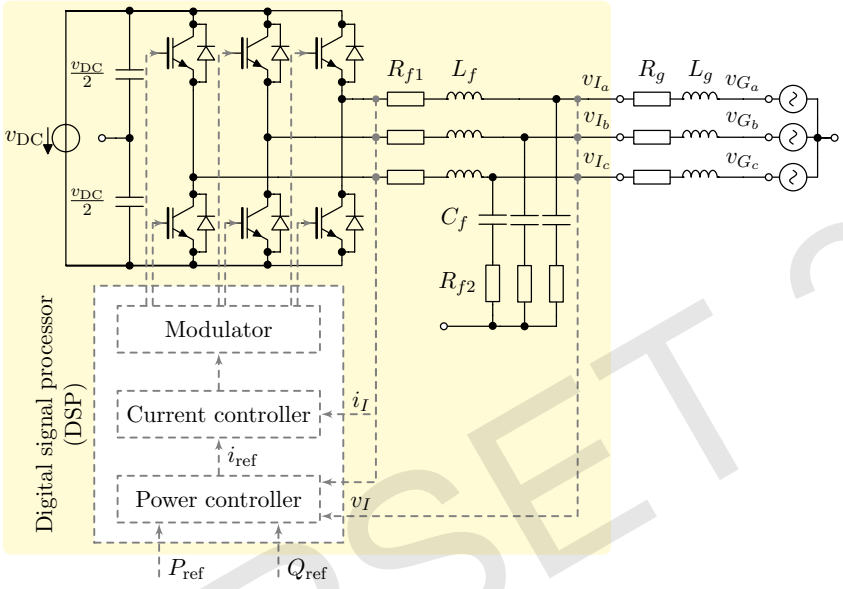

- Most power inverters are operated in grid-feeding mode

Frequency support by inverter-interfaced units

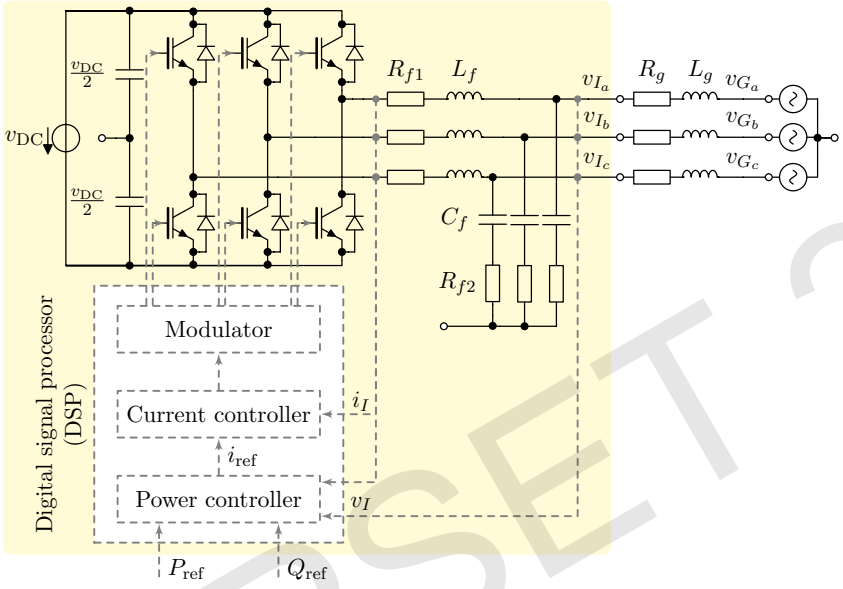

- Most power inverters are operated in grid-feeding mode
- Frequency support possible via ”virtual inertia control”

$$\boxed{P^{\mathrm{VI}} = P_{\mathrm{ref}} - K_P(\omega - \omega^d) - K_D\dot{\omega}}$$

- Inverter-interfaced generation: no rotor angular speed available

→ Local electrical frequency needs to be estimated from AC measurements at inverter terminals

Standard Phase-Locked Loop (PLL) scheme

- Most common frequency estimator: synchronous reference phase-looked loop (SRF-PLL) algorithm

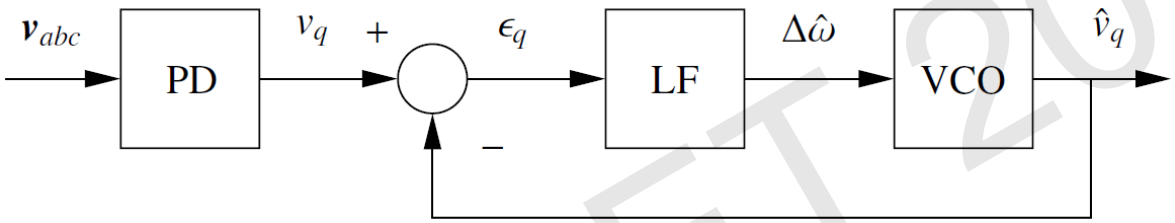

Source: F. Milano, F. Dörfler, G. Hug, D. J. Hill and G. Verbič '18

  - Phase detector (PD): *abc* to *dq* conversion of measured terminal voltage $v_{abc}(t)$
  - Loop filter (LF): tracking controller (usually PI)
  - Voltage-Controlled Oscillator (VCO): estimation of $\hat{v}_q(\hat{\theta}(t))$ using $\dot{\hat{\theta}}(t) = \omega_0 + \Delta\hat{\omega}(t)$

- SRF-PLL is based on PI control $\rightarrow$ only exact tracking of *constant* signals (same drawback applies to most other PLL variants)

PLLs can cause severe performance limitations

Analytic And Numerical Study of TCSC Devices: Unveiling the Crucial Role of Phase-Locked Loops

F. Bizzarri, *Senior Member, IEEE*, A. Brambilla *Member, IEEE*, F. Milano, *Fellow, IEEE*

IEEE TRANSACTIONS ON POWER SYSTEMS, VOL. 29, NO. 4, JULY 2014 1683

Instability of Wind Turbine Converters During Current Injection to Low Voltage Grid Faults and PLL Frequency Based Stability Solution

Ömer Göksu, *Student Member, IEEE*, Remus Teodorescu, *Fellow, IEEE*, Claus Leth Bak, *Senior Member, IEEE*, Florin Iov, *Senior Member, IEEE*, and Philip Carne Kjær, *Senior Member, IEEE*

Modeling and Design of df/dt-based Inertia Control for Power Converters

Daniel Duckwitz, Boris Fischer

Impact of current-controlled voltage source converters on power system stability

C. Schöll*, J. Lehner, H. Lens***

**University of Stuttgart, Institute of Combustion and Power Plant Technology (IFK), Department Power Generation and Automatic Control, Pfaffenwaldring 23, 70569 Stuttgart, Germany (e-mail: christian.schoell@ifk.uni-stuttgart.de; hendrik.lens@ifk.uni-stuttgart.de).*

*** TransnetBW GmbH, Osloerstr. 15-17, 70173 Stuttgart, Germany (e-mail: j.lehner@transnetbw.de)*

energies MDPI

Article

On Small Signal Frequency Stability under Virtual Inertia and the Role of PLLs

Sohail Khan [1,*], Benoit Bletterie [1], Adolfo Anta [1] and Wolfgang Gawlik [2]

[1] Electric Energy Systems, Center of Energy, Austrian Institute of Technology, 1210 Vienna, Austria; benoit.bletterie@gmail.com (B.B.); adolfo.anta@ait.ac.at (A.A.)

[2] Institute for Energy Systems and Electrical Drives, Vienna University of Technology, 1040 Vienna, Austria; wolfgang.gawlik@tuwien.ac.at

* Correspondence: sohail.khan@ait.ac.at

Phase Locked Loop Control of Inverters in a Microgrid

Matthew Surprenant, Dept of ECE, University of Wisconsin, Madison, WI, USA

Ian Hiskens, Dept of EECS, University of Michigan, Ann Arbor, MI, USA

Giri Venkataramanan, Dept of ECE, University of Wisconsin, Madison, WI, USA

Foundations and Challenges of Low-Inertia Systems

(Invited Paper)

Federico Milano, University College Dublin, Ireland, email: federico.milano@ucd.ie

Florian Dörfler and Gabriela Hug, ETH Zürich, Switzerland, emails: dorfler@ethz.ch, ghug@ethz.ch

David J. Hill* and Gregor Verbič, University of Sydney, Australia, * also University of Hong Kong, emails: dhill@eee.hku.hk, gregor.verbic@sydney.edu.au

Main contributions

- To provide a frequency estimator capable of exactly tracking a time-varying frequency signal of a symmetric three-phase AC waveform in finite time
- To demonstrate improved performance of proposed algorithm in estimating time-varying frequency signals compared to standard SRF-PLL via several numerical examples
- To show how this new frequency estimator can be used to provide ”virtual inertia” support

Setup for frequency estimator design

- Symmetric three-phase AC signal with constant amplitude $A > 0$

$$v(t) = A \begin{bmatrix} \cos\left(\phi(t)\right) \\ \cos\left(\phi(t) - \frac{2}{3}\pi\right) \\ \cos\left(\phi(t) + \frac{2}{3}\pi\right) \end{bmatrix}$$

- $\phi : \mathbb{R}_{\geq 0} \to \mathbb{R}_{\geq 0}$ represents instantaneous phase and $\dot{\phi}(t) = \omega(t)$ instantaneous frequency
- Symmetric AC signal in $\alpha\beta$ coordinates

$$y(t) = \begin{bmatrix} y_1(t) \\ y_2(t) \end{bmatrix} = T_{\alpha\beta}\, v(t) = A \begin{bmatrix} \cos\left(\phi(t)\right) \\ \sin\left(\phi(t)\right) \end{bmatrix}$$

Interpretation as parameter estimation problem

- Behavior of $y(t)$ over time is described by

$$\dot{y}(t) = \omega(t) \begin{bmatrix} 0 & -1 \\ 1 & 0 \end{bmatrix} y(t) = \begin{bmatrix} -y_2(t) \\ y_1(t) \end{bmatrix} \omega(t)$$

Interpretation as parameter estimation problem

- Behavior of $y(t)$ over time is described by

$$\dot{y}(t) = \omega(t) \begin{bmatrix} 0 & -1 \\ 1 & 0 \end{bmatrix} y(t) = \begin{bmatrix} -y_2(t) \\ y_1(t) \end{bmatrix} \omega(t)$$

- Classical problem of estimating constant parameters

$$\dot{z}(t) = b^\top(t)\theta$$

$z : \mathbb{R}_{\geq 0} \to \mathbb{R}^n$ is measured signal
$b : \mathbb{R}_{\geq 0} \to \mathbb{R}^{n \times m}$ is regressor
$\theta \in \mathbb{R}^m$ is vector of unknown constant parameters

Interpretation as parameter estimation problem

- Behavior of $y(t)$ over time is described by

$$\dot{y}(t) = \omega(t) \begin{bmatrix} 0 & -1 \\ 1 & 0 \end{bmatrix} y(t) = \begin{bmatrix} -y_2(t) \\ y_1(t) \end{bmatrix} \omega(t)$$

- Classical problem of estimating constant parameters

$$\dot{z}(t) = b^\top(t)\theta$$

$z : \mathbb{R}_{\geq 0} \to \mathbb{R}^n$ is measured signal
$b : \mathbb{R}_{\geq 0} \to \mathbb{R}^{n \times m}$ is regressor
$\theta \in \mathbb{R}^m$ is vector of unknown constant parameters

- Main difference between both models:
Frequency $\omega(t)$, i.e., unknown parameter of interest, may be time-varying
$\to$ Classical estimation methods are not applicable

Time-varying parameter estimation problem

- Assumption: $\omega(t)$ is a Lipschitz function of time, i.e.,

$$|\omega(t_1) - \omega(t_2)| \leq \Delta^\star |t_2 - t_1|, \ \forall\, t_1 \in \mathbb{R}_{\geq 0}, \ \forall\, t_2 \in \mathbb{R}_{\geq 0}, \ \Delta^\star \in \mathbb{R}_{>0}$$

- Then $\omega(t)$ is also absolutely continuous, which implies existence of a function $\xi : \mathbb{R}_{\geq 0} \to \mathbb{R}$, such that (almost everywhere)

$$\dot{\omega}(t) = \xi(t), \quad |\xi(t)| \leq \Delta^\star \leq \Delta$$

- Extended model:

$$\begin{aligned} \dot{y}(t) &= b(t)\omega(t), \\ \dot{\omega}(t) &= \xi(t), \\ b^\top(t) &= [-y_2(t), \, y_1(t)] \end{aligned}$$

Main result - I: Time-varying frequency estimator

- Proposed time-varying parameter estimator:

$$\dot{\hat{y}}(t) = -k_1 \frac{\hat{y}(t) - y(t)}{\|\hat{y}(t) - y(t)\|^{\frac{1}{2}}} + b(t)\hat{\omega}(t),$$
$$\dot{\hat{\omega}}(t) = -k_2 b^\top(t) \frac{\hat{y}(t) - y(t)}{\|\hat{y}(t) - y(t)\|}$$

- $\hat{y}(t)$ and $\hat{\omega}(t)$ represent estimates of $y(t)$ and $\omega(t)$
- Constants $k_1 > 0$ and $k_2 > 0$ are tuning gains
- Nonlinear terms in algorithm

$$\psi_1(\nu) := \frac{\nu}{\|\nu\|^{\frac{1}{2}}}, \quad \psi_2(\nu) := \frac{\nu}{\|\nu\|}, \ \nu \in \mathbb{R}^2,$$

which correspond to vector form of scalar functions $|\cdot|^{\frac{1}{2}}\mathrm{sign}(\cdot)$ and $\mathrm{sign}(\cdot)$

Main result - II: Sufficient convergence conditions

Theorem (Local finite-time convergence)

- *Let $c > 0$ and set estimator gains as*

$$k_1 = \left(\frac{1}{4} + \sqrt{2}\right) A + c,$$

$$k_2 = \frac{9(5+\sqrt{2})A}{8\,c} + \frac{9+40\sqrt{2}}{8} + \frac{5\,c}{2\,A} + \frac{\sqrt{2}\Delta}{c} + \frac{(1+\sqrt{2})\Delta^2}{\sqrt{2}\,A\,c}$$

- *Then, if estimator is initialized such that*

$$\frac{1}{8} A\,h \geq \left(\frac{\lambda_+}{\lambda_-}\left(\|\hat{y}_0 - y_0\| + (\hat{\omega}_0 - \omega_0)^2\right)\right)^{\frac{1}{2}} \left(1 - \frac{1}{\eta^{\frac{1}{2}}}\right)$$

  $\hat{\omega}(t)$ converges exactly to $\omega(t)$ in finite time

- *Parameters: $\lambda_\pm = \lambda\pm(A, k_1, k_2)$ and $\eta = \eta(A, k_1, k_2)$*

- Main technical assumption: frequency $\omega(t)$ has an upper bound such that time period between sign changes of both $y_1(t)$ and $y_2(t)$ is lower bounded by some constant $h > 0$

Remarks on estimator design

- Proposed estimation algorithm combines time-varying version of super-twisting algorithm (STA) proposed in Guzmán and Moreno, IET Ctrl. Appl.'15, with its vector form in Nagesh and Edwards, Automatica'14
- For normalized signal with $A = 1$, estimate

$$\hat{y}(t) = \begin{bmatrix} \cos\left(\hat{\phi}(t)\right) \\ \sin\left(\hat{\phi}(t)\right) \end{bmatrix}$$

  can be used in Park transformation

→ Proposed estimator provides same functionality as other PLL algorithms, but with better tracking performance in time-varying frequency scenario

Performance comparison with SRF-PLL - Ideal case

Frequency tracking exhibited by proposed estimator and SRF-PLL

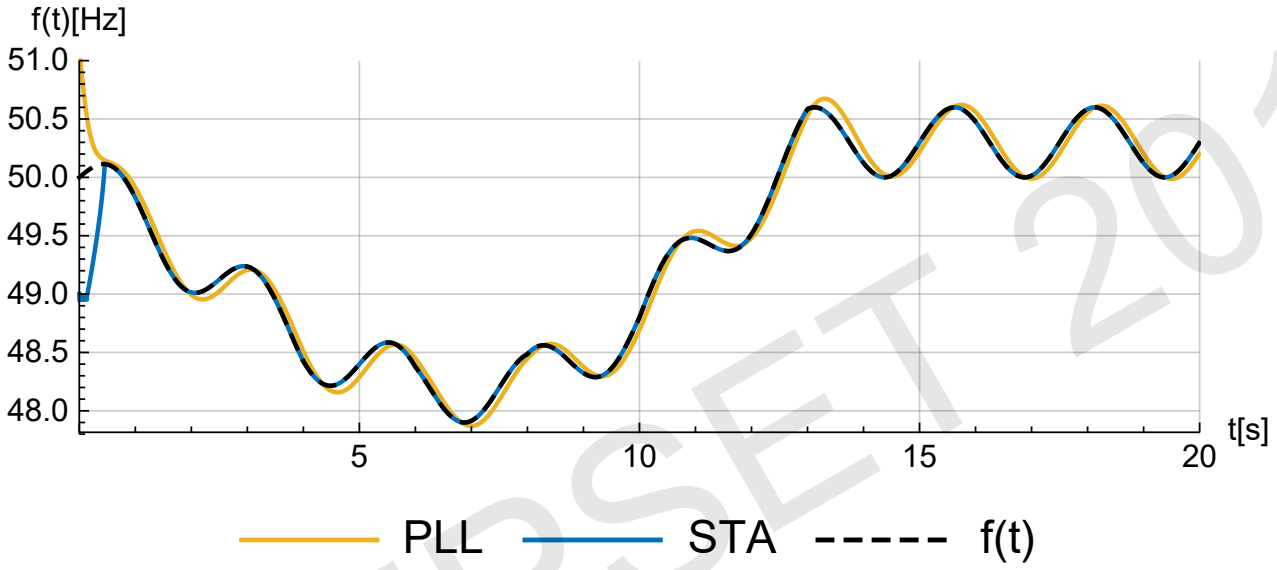

Absolute value of frequency tracking error

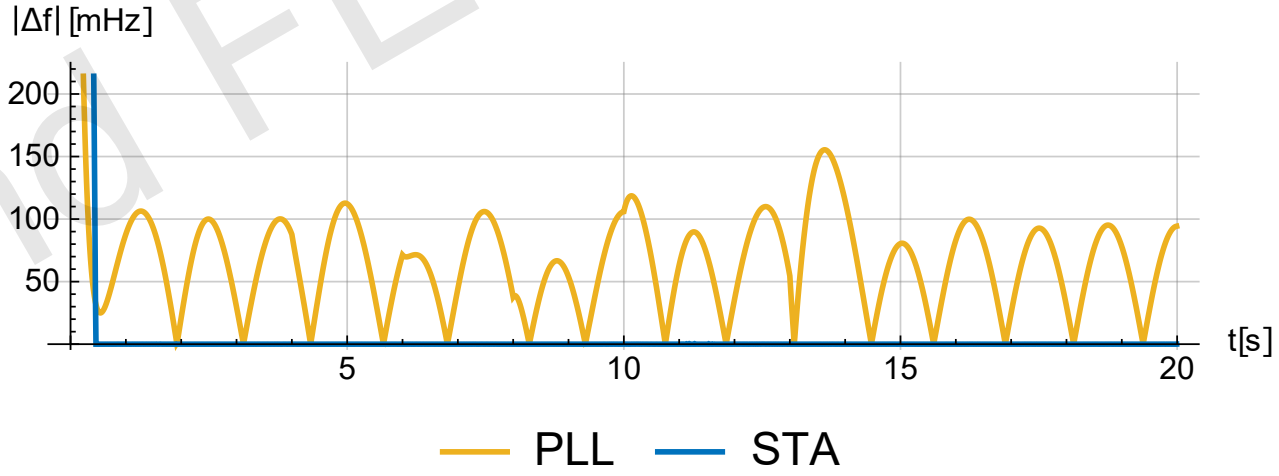

Performance comparison with SRF-PLL - Noisy case

Frequency tracking exhibited by proposed estimator and SRF-PLL

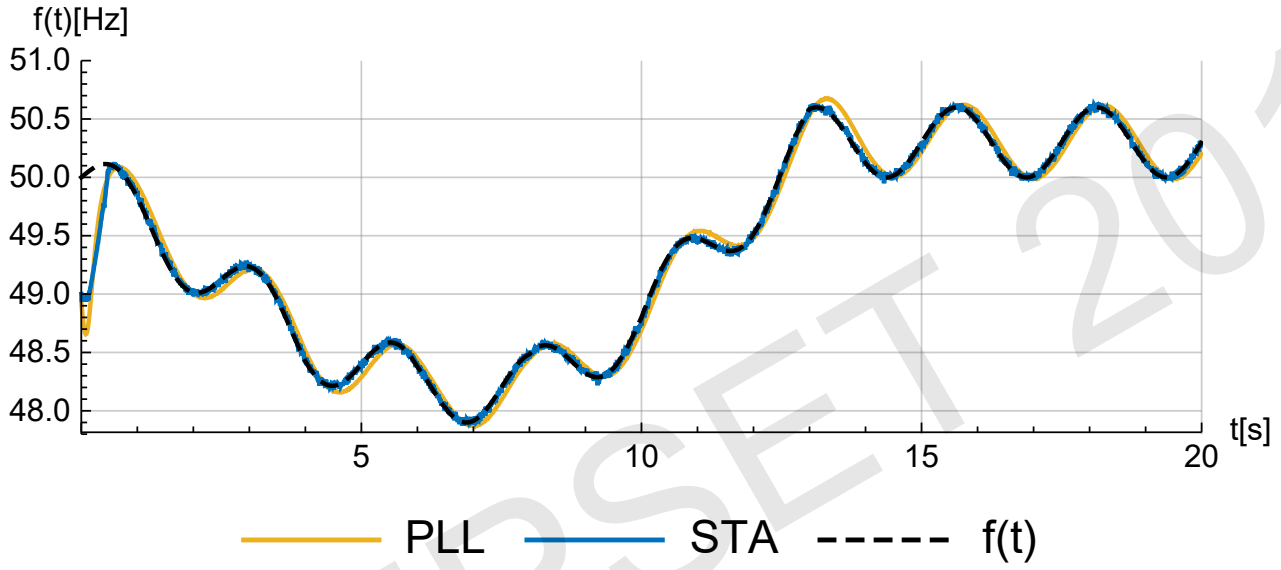

Absolute value of frequency tracking error

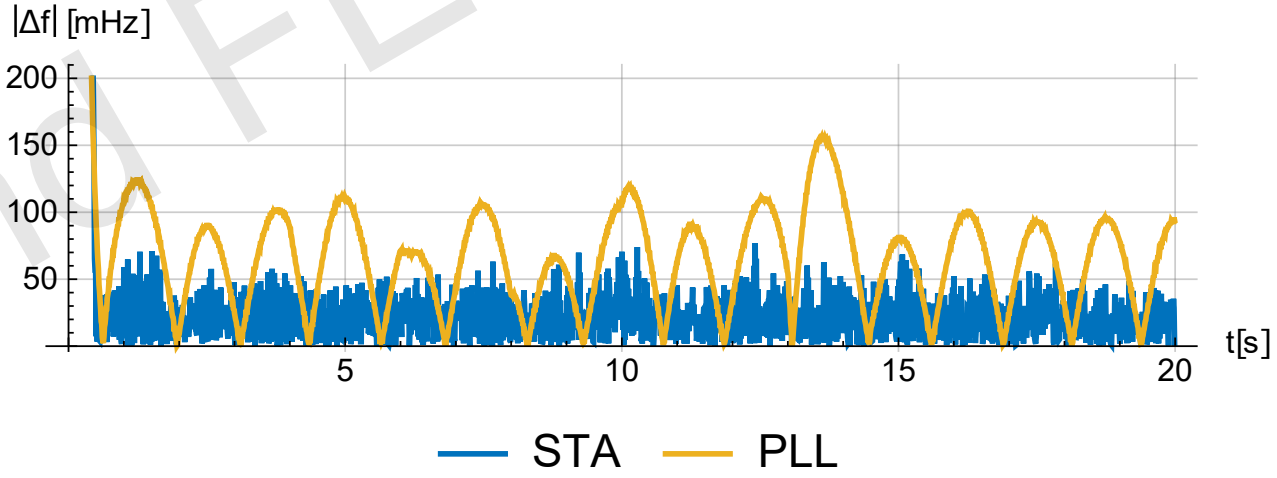

Estimator application for virtual inertia control

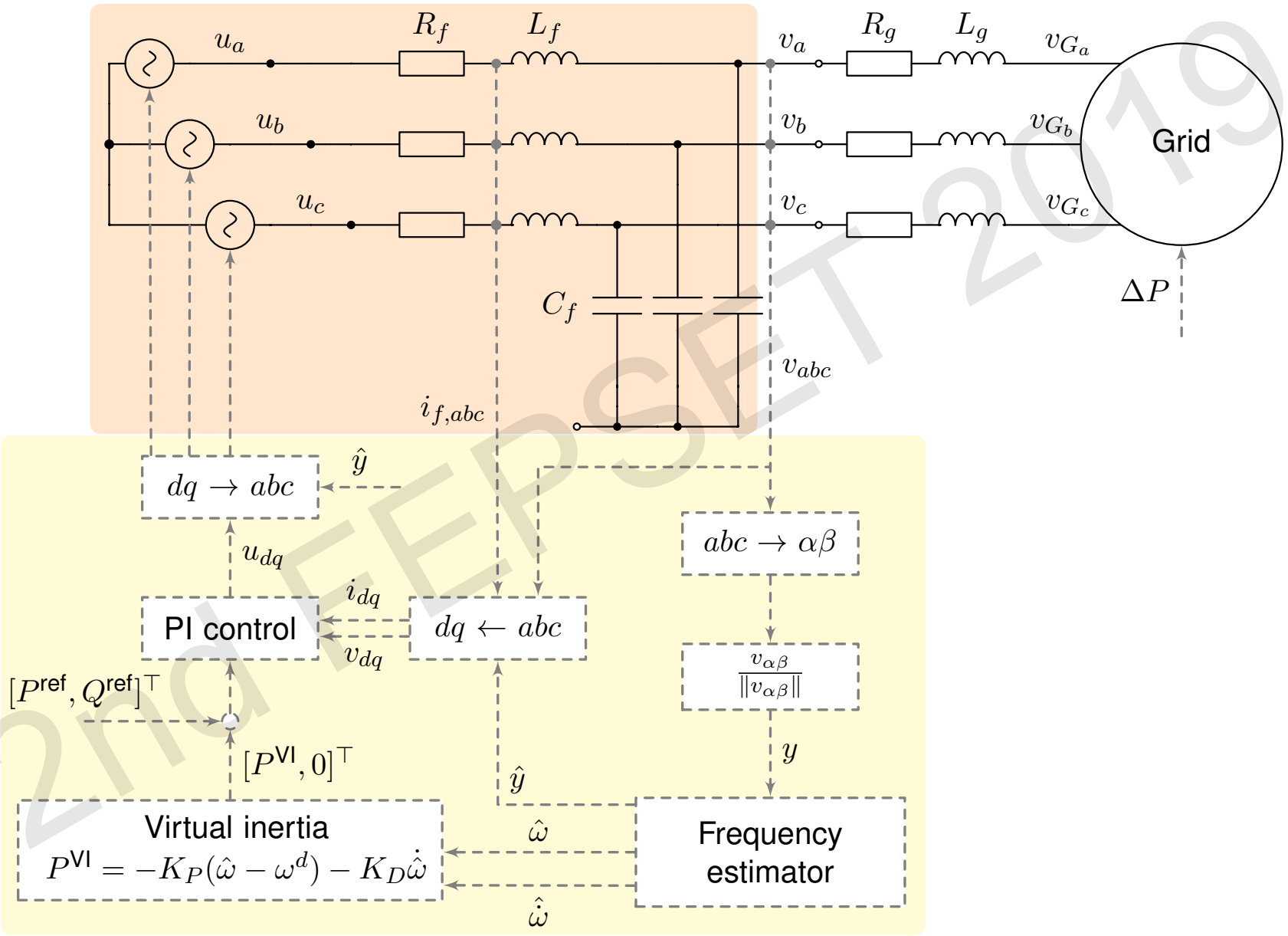

Performance comparison with SRF-PLL - Virtual inertia

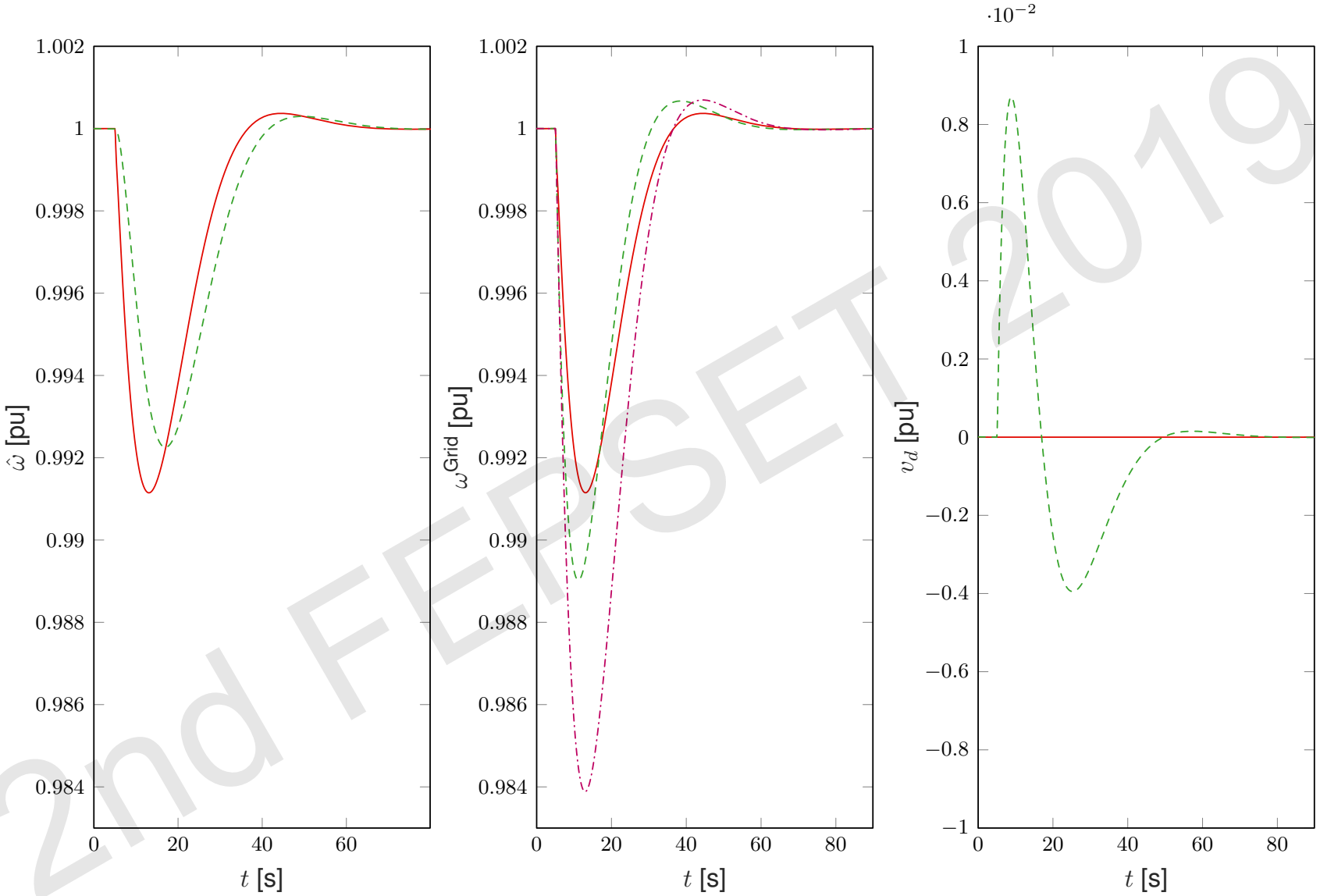

STA '–' SRF-PLL '- -'

$$\Delta P(t) = -e^{-0.1t}\sin(0.1t) \text{ [pu]}$$

Summary & future work

- Main contributions
  - Proposed time-varying version of super twisting algorithm to estimate instantaneous frequency of symmetric three phase AC signal
  - In contrast to existing approaches, algorithm is capable of exactly tracking a time-varying frequency signal (if tuned according to proposed convergence conditions)
  - Illustrated via simulations that improved virtual inertia performance can be achieved with proposed estimator compared to standard SRF-PLL
- Future work
  - Estimator improvement: global convergence result, broader set of admissible gains and extension of proposed algorithm to case of measurements corrupted by harmonics
  - Virtual inertia control: provide tuning conditions for frequency estimator and controller, which ensure closed-loop stability; delay-robustness

PhD course on Control Design for Power Systems

International Graduate School on Control

www.eeci-igsc.eu

M10 – BERLIN
25/03/2019-29/03/2019

Energy-Based Control Design to Face the Challenges of Future Power Systems

Romeo Ortega
Laboratoire des Signaux et Systèmes
CNRS CENTRALE-SUPELEC
http://www.lss.supelec.fr/perso/ortega/index.html
ortega@lss.supelec.fr

Johannes Schiffer
Control Systems and Network Control Technology Group
Brandenburg University of Technology
http://www.b-tu.de/en/fg-regelungssysteme
schiffer@b-tu.de

Theoretical topics:

- Euler-Lagrange and port-Hamiltonian models
- Control by interconnection and PID-Passivity-based Control of nonlinear systems
- Adaptive control of nonlinear and nonlinearly parameterized systems

Practical examples:

- Power electronic systems: power converters and power factor compensation for nonlinear loads
- Control of alternative energy generating systems (wind power plants, fuel-cells and PV units)
- Power systems and microgrids: stabilization of low-inertia systems, distributed passivity-based control applications
- Electromechanical systems: sensorless control of motors, doubly-fed induction generators
- Energy management via control by interconnection